Zoucheng Sanyang
Machinery Company Limited

CYCLOIDAL MOTOR TECHNOLOGY HANDBOOK

Company Profile

Zoucheng Sanyang Machinery Company Limited is located in Zoucheng City, Shandong Province, the birth place of Confucianism and Mencius, and the origin of culture. The company was established in March 2001 and is a private joint-stock high-tech enterprise that integrates design, manufacturing, sales, service, and technical consulting. It specializes in producing construction machinery and mining hydraulic components. The factory covers an area of 26,000 square meters, with a building area of 15,000 square meters.

The company owns more than 150 advanced mechanical processing centers, CNC machine tools, high-precision grinders, and other high-end and general-purpose processing equipment. It also has more than 50 sets of various precision measuring equipment and instruments, including domestic leading three-coordinate measuring machines, material tensile testing machines, and chemical analyzers. The total fixed assets amount to RMB 60 million yuan. The annual output includes more than 300,000 hydraulic valve components and 120,000 hydraulic cycloidal motors. The company is a long-term strategic partner of Eaton's former JiNing City Company (now Danfoss Ji Ning) in the United States and also an OEM for Eaton's hydraulic valve products.

With advanced product technology, manufacturing processes, and excellent management, Sanyang hydraulic motors, BZZ hydraulic steering gears, and supporting combination valves, diverter valves, manual valve switches, priority flow control valves, and other hydraulic components have won market favor due to their high quality. These products are widely used in plastic machinery, fishing machinery, petroleum machinery, landscaping machinery, construction machinery, and agricultural machinery. We have passed the ISO 9001 quality system certification and have implemented the essence of the ISO 9001 quality system. Continuous quality improvement and achieving "complete customer satisfaction" is our consistent commitment and ongoing goal.

The company has strong technical strength, complete testing means, strong independent development capabilities, and product quality assurance abilities. We can promptly design and develop new products based on market and user requirements, continuously meeting customer needs.

Zoucheng Sanyang Machinery Company Limited

Table of Contents

ONE Hydraulics Orbital Motor of BMP Series

Product Overview	01
Performance Parameters	02-03
Outline and Installation Dimensions	04-05
Installation Dimensions for Shaft Extension	06-07
Other Features	08
Ordering Information	09

TWO Hydraulics Orbital Motor of BMR Series

Product Overview	10
Performance Parameters	11-12
Outline and Installation Dimensions	13-15
Installation Dimensions for Shaft Extension	16-18
Other Features	19
Ordering Information	20

THREE Hydraulics Orbital Motor of BM3 Series

Product Overview	21
Performance Parameters	22
Outline and Installation Dimensions	23
Installation Dimensions for Shaft Extension	24
Ordering Information	25

FOUR Hydraulics Orbital Motor of BM4 Series

Product Overview	26
Performance Parameters	27
Outline and Installation Dimensions	28-32
Installation Dimensions for Shaft Extension	33-35
Other Features	36
Ordering Information	37

FIVE Hydraulics Orbital Motor of BMS Series

Product Overview	38
Performance Parameters	39–40
Outline and Installation Dimensions	41–43
Oil Port Connection Dimensions	44
Installation Dimensions for Shaft Extension	45–46
Other Features	47
Ordering Information	48

SIX Hydraulics Orbital Motor of BMT Series

Product Overview	49
Performance Parameters	50–51
Outline and Installation Dimensions	52–53
Oil Port Connection Dimensions	54
Installation Dimensions for Shaft Extension	55–57
Other Features	58
Ordering Information	59

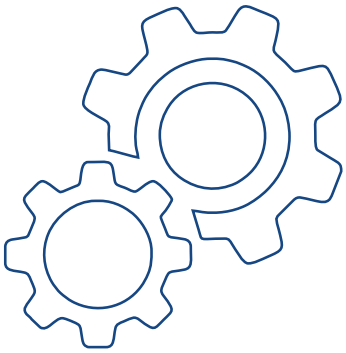

SEVEN Hydraulics Orbital Motor of BMK Series

Product Overview	60
Performance Parameters	61-63
Outline and Installation Dimensions	64-65
Installation Dimensions for Shaft Extension	66
Other Features	67
Ordering Information	68

EIGHT Hydraulics Orbital Motor of BMV Series

Product Overview	69
Performance Parameters	70-71
Outline and Installation Dimensions	72-73
Oil Port Connection Dimensions	74
Installation Dimensions for Shaft Extension	75
Other Features	76
Ordering Information	77

NINE Hydraulics Orbital Motor of BME Series

Product Overview	78
Performance Parameters	79-80
Outline and Installation Dimensions	81-82
Installation Dimensions for Shaft Extension	83
Other Features	84
Ordering Information	85

TEN Hydraulics Orbital Motor of BMM Series

Product Overview	86
Performance Parameters	87
Outline and Installation Dimensions	88-89
Installation Dimensions for Shaft Extension	90
Other Features	91
Ordering Information	92

ELEVEN Hydraulics Orbital Motor of J6K Series

Product Overview	93
Outline and Installation Dimensions	94

TWELVE Hydraulics Orbital Motor of ZMBR Series

Product Overview	95-96
Outline and Installation Dimensions	97-98
Other Features	98

Hydraulics Orbital Motor of BMP Series

- Flow distribution structure, compact size, and light weight.
- Equipped with deep groove ball bearings, capable of withstanding certain axial and radial forces.
- Pilot-type rotor and stator structure, offering higher oil distribution accuracy and mechanical efficiency.
- Special seals and built-in one-way valve can withstand higher back pressure and allow for series or parallel usage.
- Suitable for medium to low-load operating conditions.

BMP Technical Parameters

Displacement (ml/r)		50	63	80	100	125	160	200	250	315	400
Flow (L/min)	Maximum Continuous	38	45	58	58	58	58	58	58	58	58
	Intermittent	45	53	69	69	69	69	69	69	69	69
Speed (rpm)	Maximum Continuous	698	663	685	560	456	356	285	236	176	145
	Intermittent	853	775	820	671	548	426	341	282	210	173
Pressure (MPa)	Maximum Continuous	12.5	12.5	12.5	12.5	12.5	12.5	11	10	9	9
	Intermittent	14	14	14	14	14	12.5	12.5	12.5	12.5	11
Torque (N.m)	Maximum Continuous	74	87	124	155	194	227	282	302	365	456
	Intermittent	86	98	141	176	221	260	318	383	406	521

- The maximum continuous value refers to the highest value at which the motor of this displacement can operate continuously.
- The intermittent value refers to the maximum value at which the motor of this displacement can operate for 6 seconds within 1 minute.
- The motor should not be used simultaneously at maximum pressure and maximum speed.
- Recommended Oil: Anti-wear hydraulic oil, with a solid contamination level of ISO 18/15 for the operating fluid.
- The maximum temperature for working oil is 80℃.
- The motor can be used in series or parallel, and the back pressure should not exceed 5MPa during series or parallel operation. If exceeded, it is recommended to connect an External Drain Port pipe, which should preferably be directly connected to the oil tank.
- Before the motor operates at full load, it should undergo a break-in period. It is recommended to run it at less than 30% of the maximum working pressure for 1 hour.

BMP Series-Performance Parameters Table

BMP-50 Pressure (MPa)

Flow (L/min)	3	6	7	8	10	11	12.5	16.5
8	18	36	42	50	60	72	79	102
	150	147	144	140	137	127	122	90
15	19	37	43	48	61	73	83	105
	290	285	283	276	275	265	256	230
20	17	37	42	50	62	72	80	107
	388	385	381	375	372	365	352	332
30	15	36	42	50	63	70	81	108
	584	578	570	566	560	555	546	516
35	15	35	42	50	63	68	80	106
	680	675	670	662	654	646	640	610
45	14	34	40	48	62	70	80	
	878	868	863	856	849	840	830	
50	13	35	40	48	63			
	970	960	955	950	942			

BMP-63 Pressure (MPa)

Flow (L/min)	3	6	7	8	10	11	12.5	16.5
8	22	46	54	62	76	91	98	126
	125	124	123	121	118	116	113	72
15	22	46	54	60	76	91	104	132
	233	231	229	227	224	222	219	185
20	20	46	54	63	78	90	100	134
	310	309	307	305	301	298	294	263
30	20	45	53	63	79	88	102	135
	456	463	462	460	457	455	451	409
35	19	44	53	63	79	84	100	133
	543	540	539	537	533	531	528	484
45	18	42	50	60	78	88	100	
	705	702	700	698	695	693	689	
50	16	44	50	60	79			
	781	778	776	774	770			

BMP-80 Pressure (MPa)

Flow (L/min)	3	6	7	8	10	11	12.5	16.5
8	28	60	70	80	100	110	128	168
	97	93	92	89	84	80	75	50
15	28	61	70	80	100	114	128	170
	184	181	178	174	169	166	160	140
20	27	60	70	80	100	112	129	170
	246	243	240	238	234	230	223	205
30	26	60	69	79	100	110	128	170
	370	366	363	360	354	350	345	323
35	25	58	67	77	100	110	126	170
	432	426	424	420	415	411	405	385
45	23	53	65	77	95	108	124	168
	554	550	546	541	536	530	524	503
50	20	55	65	75	95	105	123	168
	616	608	606	603	599	593	585	560
60	19	53	62	75	95	108		
	741	732	727	722	717	712		
75	16	47	60	70	90			
	825	820	815	810	808			

BMP-100 Pressure (MPa)

Flow (L/min)	3	6	7	8	10	11	12.5	16.5
8	35	74	88	100	126	140	160	210
	78	75	73	70	64	68	56	35
15	35	74	85	100	126	140	160	212
	150	145	144	141	137	133	129	110
20	34	74	88	100	125	145	161	212
	197	195	193	190	189	183	178	160
30	33	71	85	95	123	138	158	212
	295	294	293	290	288	283	279	259
35	29	70	81	95	120	135	155	121
	347	345	344	342	337	335	330	310
45	30	66	80	93	120	133	155	208
	445	443	442	439	435	432	426	405
50	25	66	79	93	118	134	152	
	498	495	463	491	485	480	476	
60	22	65	75	93	116	132		
	599	594	589	587	584	577		
75	20	58	75	88	113			
	674	666	663	660	655			

BMP-125 Pressure (MPa)

Flow (L/min)	3	6	7	8	10	11	12.5	16.5
8	44	94	112	128	158	180	200	263
	60	59	58	56	53	50	45	25
15	44	95	111	127	160	178	205	265
	118	116	115	114	110	108	105	85
20	42	95	108	128	158	175	202	268
	159	157	156	153	150	145	142	129
30	40	92	108	125	156	178	198	265
	236	235	233	230	225	220	218	206
35	38	87	107	122	154	174	195	268
	226	273	273	272	268	265	262	247
45	37	85	102	120	152	173	194	265
	355	352	351	349	345	341	339	322
50	33	85	98	120	149	170	192	
	395	392	390	388	385	384	380	
60	32	83	98	117	148	165		
	476	470	468	465	461	459		
75	25	75	95	110	142			
	594	588	585	582	577			

Torque(N.M): 268
Speed (RPM): 247

Continuous

Intermittent

BMP Series-Performance Parameters Table

BMP-160 Pressure (MPa)

Flow (L/min)	3	6	7	8	10	11	12.5	16.5
8	56 47	120 46	143 45	160 44	200 42	226 40	245 38	334 24
15	56 93	120 93	135 92	160 90	202 88	226 86	245 83	341 75
20	55 120	120 118	143 117	160 116	203 115	226 114	245 114	343 104
30	54 185	118 184	140 183	160 181	200 178	225 176	242 175	340 163
35	53 214	115 213	138 212	157 211	199 208	220 207	242 205	337 196
45	52 277	112 275	135 274	156 273	198 270	220 268	238 265	335 256
50	45 308	110 307	132 305	153 303	195 300	215 298	233 296	
60	44 368	106 366	130 365	150 364	192 362	214 360		
75	32 462	95 458	120 457	142 456	183 453			

BMP-200 Pressure (MPa)

Flow (L/min)	3	6	7	8	10	11	15
8	75 38	155 37	178 36	204 35	255 33	283 29	385 12
15	72 74	152 72	180 71	206 70	259 68	265 66	390 57
20	71 99	151 98	178 97	205 95	255 94	285 91	390 81
30	70 148	149 147	175 146	200 145	254 142	285 138	388 126
35	68 173	146 172	172 171	200 168	250 165	280 163	383 154
45	63 220	142 219	170 218	195 216	248 213	278 211	382 200
50	58 245	138 243	166 242	195 241	242 238	273 263	
60	56 295	135 294	165 393	190 292	240 289		
75	42 370	122 365	150 364	178 362			

BMP-250 Pressure (MPa)

Flow (L/min)	3	6	7	8	10	11	15
8	94 30	195 29	225 28	259 27	326 25	357 24	
15	90 60	193 59	225 58	260 57	326 55	360 53	455 48
20	89 78	191 78	225 77	258 76	320 74	355 73	155 65
30	84 118	188 117	220 117	250 116	320 114	354 112	452 103
35	82 135	184 134	218 132	252 131	316 127	350 125	448 120
45	79 179	179 178	215 177	246 176	310 174	345 172	442 163
50	74 199	174 196	210 195	243 194	306 192	338 191	
60	70 236	171 235	206 235	239 234	300 230		
75	55 597	155 295	190 295	221 294			

BMP-315 Pressure (MPa)

Flow (L/min)	3	6	7	8	10	12.5
8	115 25	244 24	282 22	312 17	388 13	
15	116 46	243 46	284 45	324 43	406 40	503 20
20	114 62	242 62	282 61	325 57	405 56	505 44
30	109 93	238 93	276 92	320 90	400 88	500 76
35	105 109	232 108	273 107	314 105	398 103	498 93
45	100 140	225 140	268 138	310 136	390 135	490 125
50	92 156	218 155	262 154	306 153	384 150	486 140
60	89 188	215 187	258 186	300 18	378 180	
75	69 236	195 235	236 233	278 232		

BMP-400 Pressure (MPa)

Flow (L/min)	3	6	7	8	10	12.5
8	147 19	305 18	355 17			
15	147 38	308 37	359 35	406 33	435 32	531 26
20	144 49	305 49	358 47	408 45	435 43	510 37
30	137 73	300 73	352 72	400 70	433 68	528 63
35	135 85	294 85	345 84	395 82	425 81	525 73
45	130 110	286 110	339 108	390 106	420 105	515 100
50	117 124	278 124	330 122	382 120	410 119	
60	112 148	274 148	326 147	378 146	402 145	
75	88 185	246 185	298 184	350 182		

Torque(N.M): 525
Speed (RPM): 73

Continuous

Intermittent

Installation Dimensions of BMP Series

F1

2-hole diamond flange with S-type oil port

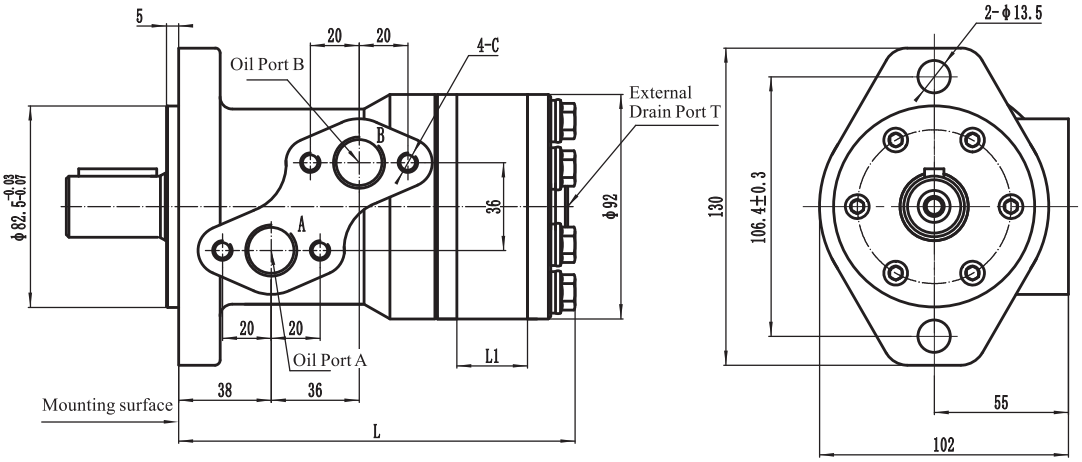

F2

2-hole diamond flange with S-type oil port

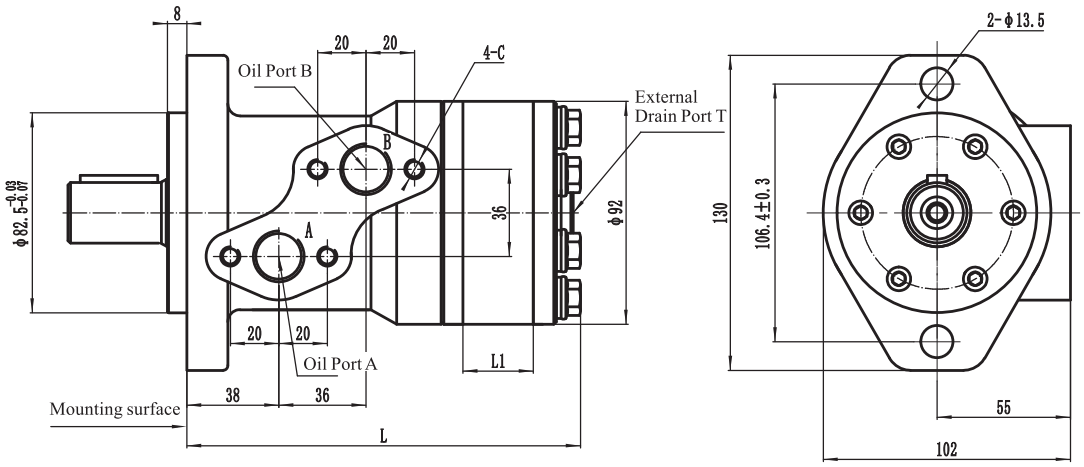

F3

2-hole diamond flange with vertical oil port

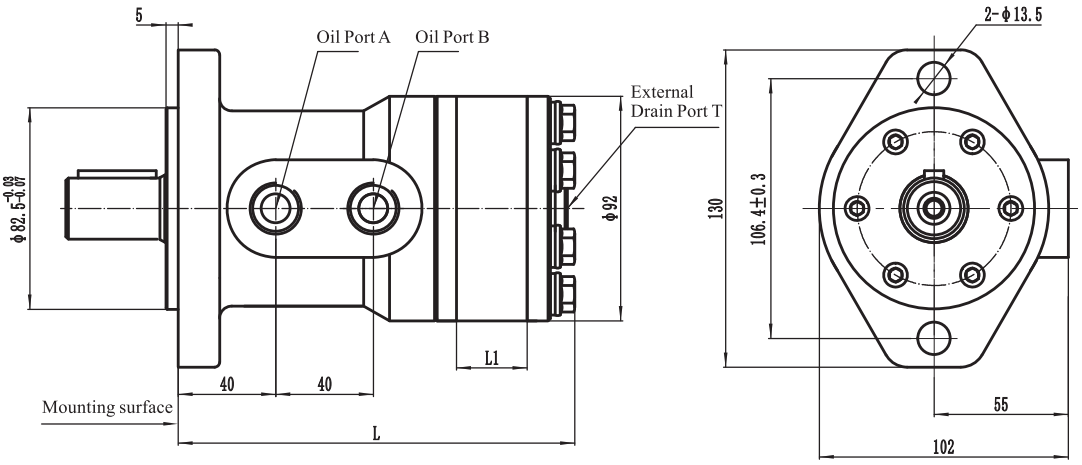

Installation Dimensions of BMP Series

F4

4-hole square flange with vertical oil port

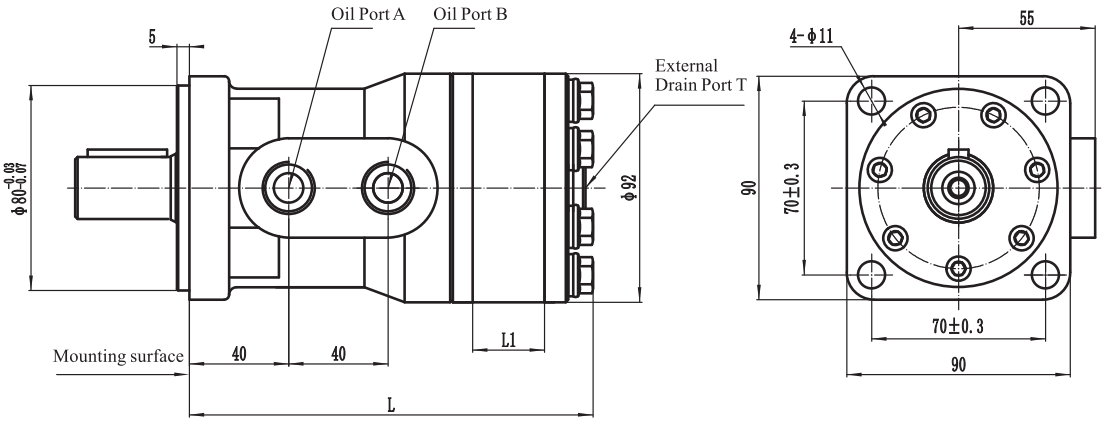

F5

4-thread square flange with horizontal and vertical oil port

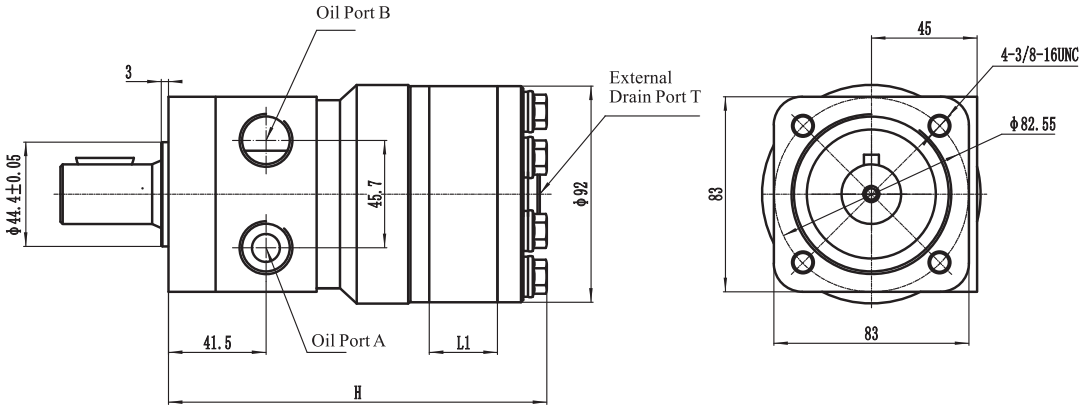

Model	BMP-50	BMP-63	BMP-80	BMP-100	BMP-125	BMP-160	BMP-200	BMP-250	BMP-315	BMP-400
L1	9	11	14.5	17.8	23	29	37	46	57	72
L	143	145	149	152	157	163	171	180	191	206
H	141	143	147	150	155	161	169	178	189	204

Common Thread for A/B		Common Thread for External Drain Port T		Thread C	
A/B-1	G1/2	T1	G1/4	C1	None
A/B-2	7/8-14UNF O-ring	T2	7/16-20UNF 0-ring	C2	M8
A/B-3	1/2-14NPTF	T3	M14x1.5		
A/B-4	M18x1.5				
A/B-5	M20x1.5				
A/B-6	G1/2 0-ring				

Connection Dimensions for BMP Shaft Extension

P1

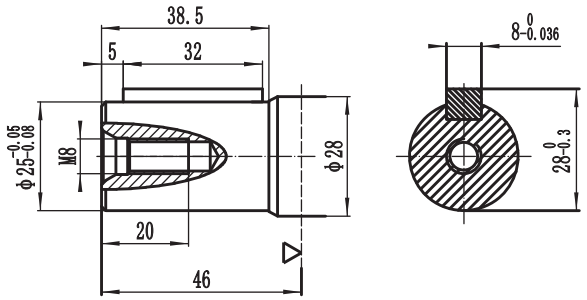

Φ25 Cylindrical Shaft
Half-Round Key 8x7x32

P4

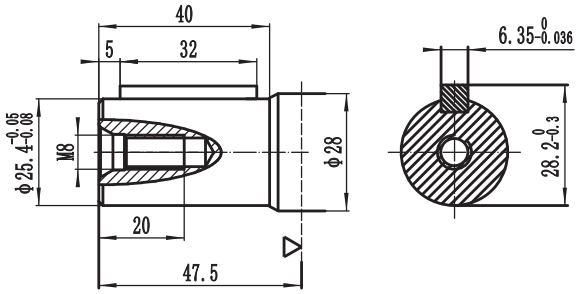

Φ25.4 Cylindrical Shaft
Half-Round Key 6.35x6.35x32

P2

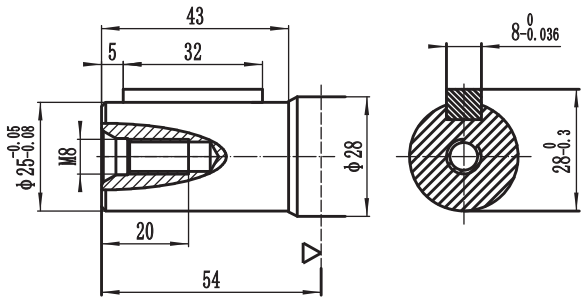

Φ25 Cylindrical Shaft
Half-Round Key 8x7x32

P5

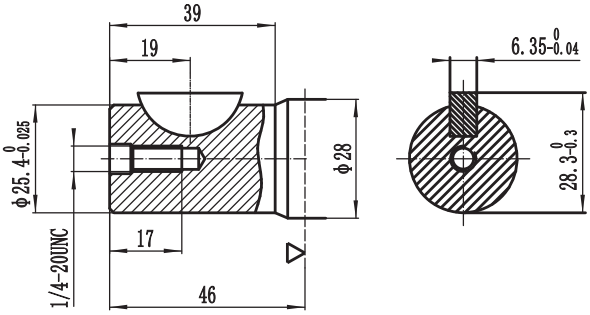

Φ25.4 Cylindrical Shaft
Flat Key Φ25.4x6.35

P3

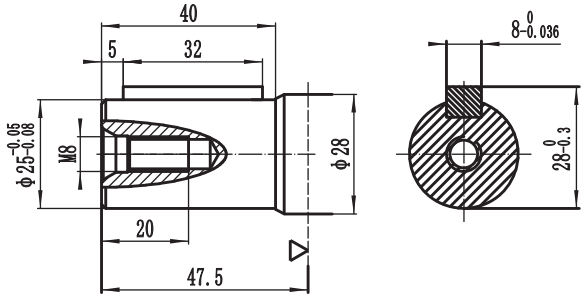

Φ25 Cylindrical Shaft
Half-Round Key 8x7x32

Motor Mounting Surface

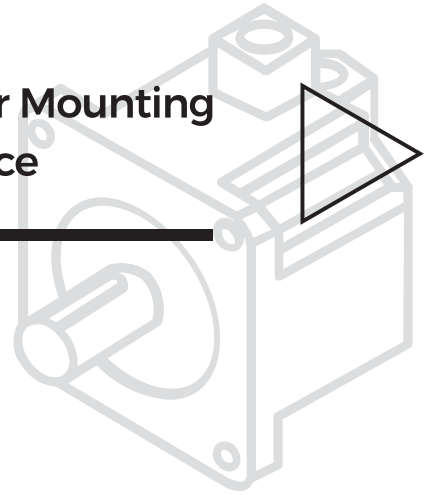

Connection Dimensions for BMP Shaft Extension

H1

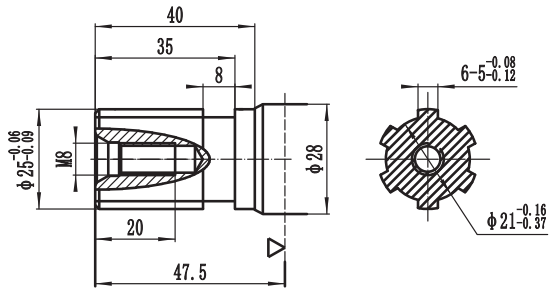

6-25x21x5
Φ25 Rectangular Spline Shaft

H4

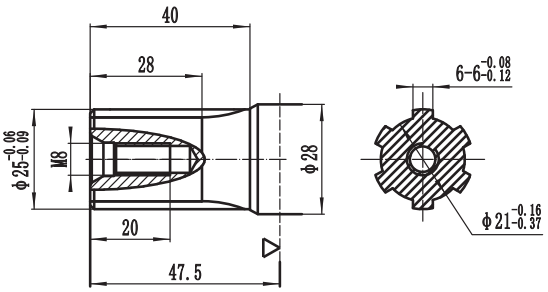

6-25x21x6
Φ25 Rectangular Spline Shaft

H2

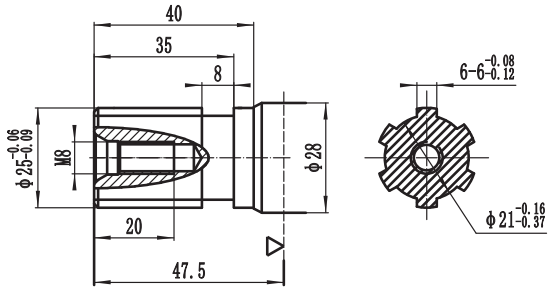

6-25x21x6
Φ25 Rectangular Spline Shaft

H5

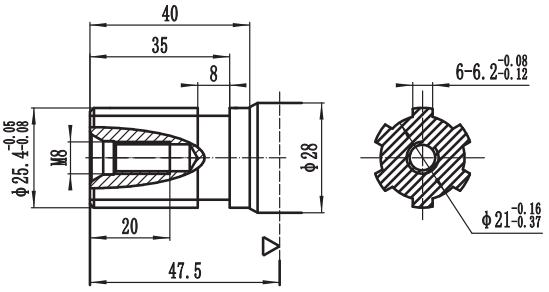

6-25.4x21x6.2
Φ25.4 Rectangular Spline Shaft

H3

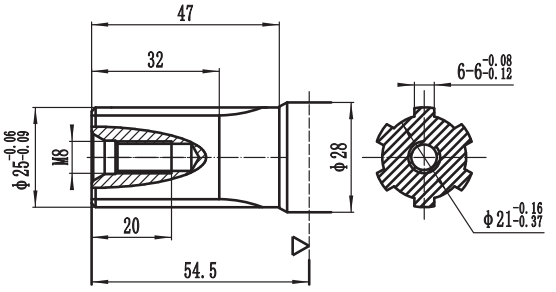

6-25x21x6
Φ25 Rectangular Spline Shaft

H6

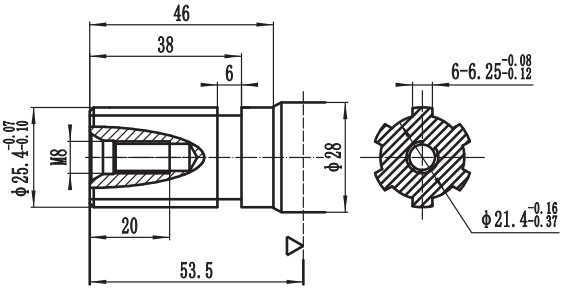

6-25.4x21.4x6.25
Φ25.4 Rectangular Spline Shaft

Motor Mounting Surface

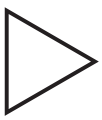

Rotation Direction of Output Shaft : Standard

When facing the motor shaft extension direction, the shaft rotates as follows:

When oil port A is at high pressure, the output shaft rotates clockwise.

When oil port B is at high pressure, the output shaft rotates counterclockwise.

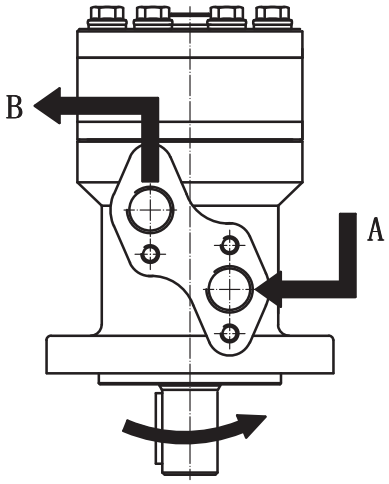

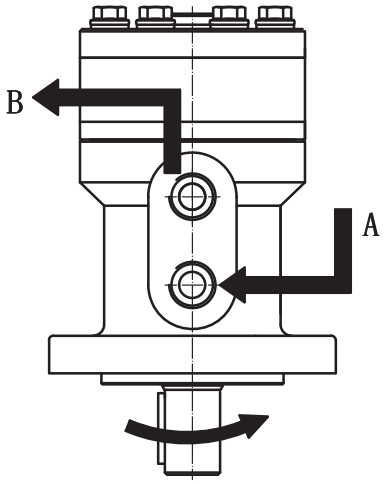

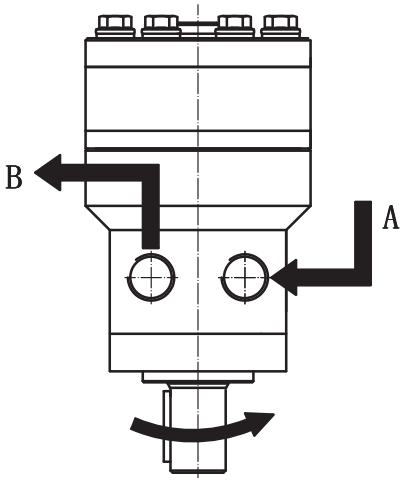

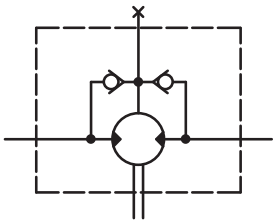

Motor Principle Diagram

$$F_r = \frac{800}{n} \cdot \frac{25000}{95+L} \text{ daN}$$

Fr = Radial Force (daN)

L = Distance (mm)

n = Speed (rpm)

L = 27mm

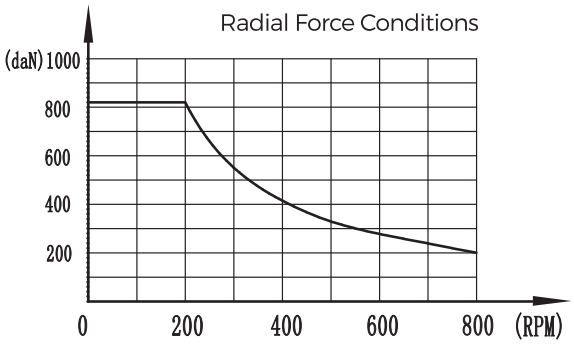

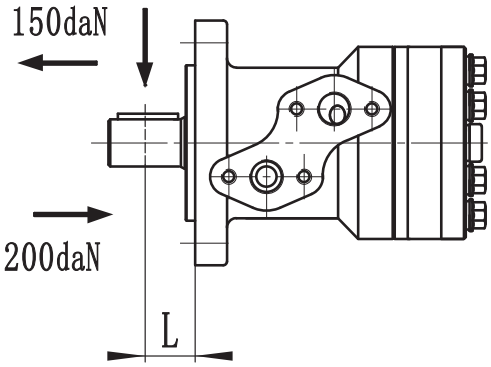

Ordering Information for Cycloidal Hydraulic Motor of BMP Series

Ordering Information:

1		2		3		4		5		6		7		8
BMP	—		—		—		—		—		—		—	

1	Product Series	BMP									
2	Displacement (ml/r)	50	63	80	100	125	160	200	250	315	400

3	
Code	Installation Flanges, Stop Rings
F1	2-Ø13.5 2-hole diamond flange with S-type oil port, Installation Stopper Ø82.5×5
F2	2-Ø13.5 2-hole diamond flange with S-type oil port, Installation Stopper Ø82.5×8
F3	2-Ø13.5 2-hole diamond flange with vertical oil port, Installation Stopper Ø82.5×5
F4	4-Ø11 4-hole square flange with vertical oil port, Installation Stopper Ø80×5
F5	4-3/8-16UNC square flange with horizontal and vertical oil port, Installation Stopper Ø44.4×3

4	
Code	Output Shaft
P1	Ø25 flat key shaft, flat key 8×7×32, shaft length 38.5
P2	Ø25 flat key shaft, flat key 8×7×32, shaft length 43
P3	Ø25 flat key shaft, flat key 8×7×32, shaft length 40
P4	Ø25.4 flat key shaft, flat key 6.35×6.35×32, shaft length 40
P5	Ø25.4 flat key shaft, half-round key Ø25.4×6.35, shaft length 39
H1	Ø25 rectangular spline shaft, 6-25×21×5, shaft length 40
H2	Ø25 rectangular spline shaft, 6-25×21×6, shaft length 40
H3	Ø25 rectangular spline shaft, 6-25×21×6, shaft length 47
H4	Ø25 rectangular spline shaft, 6-25×21×6, shaft length 40
H5	Ø25.4 rectangular spline shaft, 6-25.4×21×6.2, shaft length 40
H6	Ø25.4 rectangular spline shaft, 6-25.4×21. 4×6.25, shaft length 46

5	
Code	Oil Port
A/B-1	G1/2
A/B-2	7/8-14UNF O-ring
A/B-3	M18x1.5
A/B-4	M22 x1.5
A/B-5	1/2-14NPTF
A/B-6	G1/2 0-ring

6	
Code	External Drain Port
T0	None
T1	G1/4
T2	7/16-20UNF O-ring
T3	M14X1.5

7	
Code	Thread
C1	None
C2	M8

8	
Code	Rotation
None	Standard
R	Reverse

Hydraulics Orbital Motor of BMR Series

- Flow distribution structure , compact size, and light weight.
- Equipped with deep groove ball bearings, capable of withstanding certain a xial and radial forces.
- Pilot-type rotor and stator structure, offering higher oil distribution accuracy a nd mechanical efficiency.
- Uses special seals and built-in one-way valves, capable of withstanding higher back pressure, and allowing for series or parallel usage.
- Multiple flange, output shaft, and oil port installation configurations available.

BMR Technical Parameters

Displacement (ml/r)		50	63	80	100	125	160	200	250	315	400	500
Flow (L/min)	Maximum Continuous	40	53	58	58	58	58	58	58	58	58	58
	Intermittent	46	58	68	68	68	68	68	68	68	68	68
Speed (rpm)	Maximum Continuous	750	760	653	551	440	344	276	220	175	140	110
	Intermittent	863	832	766	646	516	404	323	258	205	162	128
Pressure (MPa)	Maximum Continuous	14	14	14	14	14	14	12.5	11	9	9	8
	Intermittent	17	17	17	17	17	17	15	13	11	10	9
Torque (N.m)	Maximum Continuous	89	112	142	178	223	285	318	350	360	418	464
	Intermittent	108	136	172	216	270	346	382	416	400	464	500

- The maximum continuous value refers to the maximum value at which the motor of this displacement can operate continuously.
- The intermittent value refers to the maximum value at which the motor of this displacement can operate for 6 seconds within 1 minute.
- The motor should not be used simultaneously at maximum pressure and maximum speed.
- Recommended oil: Anti-wear hydraulic oil, with a solid contamination level of ISO 18/15 for the working fluid.
- The maximum working oil temperature is 80℃.
- The motor can be used in series or parallel, and when used in series or parallel, the back pressure should not exceed 5 MPa. If it exceeds, it is recommended to connect an External Drain Port pipe, which should preferably be directly c onnected to the oil tank.
- The motor should undergo a break-in period before operating at full load, recommended to run at less than 30% of the maximum working pressure for 1 hour.

Performance Parameters Table for BMR Series

Continuous

Intermittent

BMR-50 Pressure (MPa)

Flow (L/min)	5	7	9	10	12	14	16	17.5
5	35 95	45 85	60 75	66 74	78 70	89 45		
10	36 185	45 175	63 165	68 162	79 150	95 130	106 110	120 85
15	35 282	49 276	65 265	75 260	88 250	100 230	110 210	120 185
20	34 375	45 375	65 365	69 360	85 345	95 330	110 308	125 275
25	34 475	45 466	60 460	69 450	80 436	98 420	109 395	125 360
30	35 575	45 570	60 561	68 552	80 541	95 531	109 500	125 465
35	32 665	42 663	59 655	66 654	80 635	93 623	107 598	
40	30 760	41 758	58 753	66 750	79 738	92 725	105 700	
45	29 855	40 855	58 850	65 845	78 835	90 814		

BMR-63 Pressure (MPa)

Flow (L/min)	5	7	9	10	12	14	16	17.5
5	41 76	60 67	76 59	83 58	98 55	112 36		
10	45 146	61 138	77 130	85 125	101 120	118 102	132 87	150 67
15	43 222	61 218	80 209	92 202	110 190	125 160	138 145	150 130
20	43 295	57 594	82 288	87 284	105 272	120 245	129 223	152 195
25	48 375	54 364	76 363	86 355	100 312	122 328	130 255	153 205
30	44 454	54 458	74 443	85 431	100 427	120 419	136 395	157 367
35	40 525	53 521	74 517	83 516	100 501	117 492	134 472	
40	37 600	52 294	73 594	82 592	98 583	115 572		
45	28 675	48 675	70 671	80 667	93 659			

BMR-80 Pressure (MPa)

Flow (L/min)	5	7	9	10	12	14	16	17.5
5	48 61	54 58	84 52	106 46	129 40			
10	56 115	78 108	98 105	107 100	130 91	148 75	170 53	180 45
20	50 238	82 235	105 226	118 223	132 208	160 195	180 173	188 162
30	48 364	75 360	96 356	115 345	130 330	150 320	178 300	190 283
40	45 487	72 482	97 475	105 472	128 460	149 446	177 420	189 409
50	42 615	70 615	90 606	98 599	125 590	147 568	171 547	187 535
60	40 740	63 724	85 720	95 715	118 705	142 688	169 668	185 657
70	36 860	58 852	82 840	90 837	112 820	139 810	165 790	
75	29 925	56 915	77 910	85 899	110 886	133 870		

BMR-100 Pressure (MPa)

Flow (L/min)	5	7	9	10	12	14	16	17.5
5	64 49	90 47	118 46	134 42	154 38			
10	73 99	99 95	123 86	139 85	160 75	183 62	210 52	223 45
20	68 199	95 196	123 187	143 182	165 175	199 163	220 150	238 138
30	65 299	95 294	120 288	140 285	165 278	194 263	220 249	240 235
40	59 400	88 394	119 387	135 385	161 380	192 366	218 350	238 336
50	55 499	85 498	118 488	125 484	157 475	185 463	217 451	235 436
60	48 599	79 596	110 587	119 285	150 579	180 568	216 550	235 536
70	43 699	70 692	110 687	112 683	142 679	170 668	200 645	
75	39 748	63 740	98 737	105 735	140 720			

BMR-125 Pressure (MPa)

Flow (L/min)	5	7	9	10	12	14	16	17.5
5	74 37	106 32	140 27	163 21				
10	90 72	122 71	160 65	175 63	205 55	237 42	259 22	270 14
20	85 155	119 152	158 150	172 145	208 138	250 122	278 109	292 90
30	42 236	108 235	158 233	165 225	206 218	242 206	277 192	291 170
40	79 315	105 312	150 309	161 307	205 302	238 298	275 273	289 254
50	75 399	95 395	145 393	158 390	196 380	238 368	265 355	285 337
60	60 675	95 475	139 470	155 468	183 463	223 450	254 428	279 416
70	60 655	83 552	125 550	150 549	178 545	212 538	252 515	
75	55 595	80 593	122 590	145 585	172 582	205 577		

Torque(N.M): 289
Speed (RPM): 254

BMR-160 Pressure (MPa)

Flow (L/min)	5	7	9	10	12	14	16	17.5
5	100 29	142 26	188 21	207 19				
10	115 57	160 56	205 52	220 50	262 43	330 38	340 34	362 27
20	115 119	160 115	206 110	230 108	265 102	320 95	355 84	380 76
30	105 184	158 180	202 177	220 172	261 165	305 153	344 134	378 130
40	100 247	145 245	195 238	218 236	256 230	299 217	340 199	375 185
50	92 307	142 305	188 300	209 298	250 290	295 280	336 261	366 244
60	84 369	137 367	180 365	199 361	240 355	286 342	330 334	360 304
70	65 436	120 435	165 430	180 427	223 415	282 402		
75	60 465	111 462	158 459	175 456	220 447			

Performance Parameters Table for BMR Series

BMR-200 Pressure (MPa)

Flow (L/min)	5	7	9	10	12	14	17.5
5	129 24	176 22	230 18	256 13			
10	149 50	205 48	255 45	290 43	328 40	370 30	443 23
20	140 99	202 96	250 93	323 90	330 85	411 78	448 65
30	130 150	192 148	242 140	307 136	325 131	376 122	445 105
40	125 200	186 196	233 193	305 188	314 181	390 170	436 149
50	120 250	177 247	225 245	295 238	305 231	382 218	427 192
60	110 300	166 295	220 290	285 288	292 282	373 268	
70	98 350	150 348	205 342	244 338	278 330		
75	85 375	141 372	199 366	235 362			

BMR-250 Pressure (MPa)

Flow (L/min)	5	7	8	10	11	14	17.5
5	172 20	240 19	300 18	380 16	352 15		
10	182 39	252 38	295 35	350 32	380 30	470 23	535 16
20	178 79	252 75	295 75	352 69	385 67	470 57	548 48
30	170 119	250 116	285 115	349 110	380 106	469 95	546 80
40	159 156	232 155	269 153	330 150	366 147	460 130	530 110
50	148 198	216 195	252 194	320 162	352 160	453 152	520 147
60	130 240	200 238	235 236	305 232	340 228	430 210	
70	117 278	190 278	220 275	290 270	320 267		
75	105 299	180 298	210 297	280 294			

BMR-315 Pressure (MPa)

Flow (L/min)	3	5	7	9	10	11
5	110 14	199 12				
10	108 31	190 30	272 29	360 28	400 26	451 25
20	110 61	196 60	279 59	356 57	396 55	448 53
30	106 91	186 90	270 89	355 86	390 84	442 82
40	100 123	179 122	262 120	350 117	382 112	436 110
50	92 154	169 153	252 151	342 147	373 140	432 136
60	86 185	159 184	241 182	339 177	369 172	428 170
70	77 217	146 216	235 213	324 208		
75		132 231	212 228	303 222		

BMR-400 Pressure (MPa)

Flow (L/min)	3	5	7	8	9	13
5	152 12					
10	170 24	252 23	370 22			
20	170 48	281 47	365 45	436 44	480 42	590 40
30	154 72	278 70	355 68	426 66	470 63	580 60
40	144 95	273 94	350 90	410 83	466 80	576 76
50	137 121	269 119	344 116	406 112	460 108	570 101
60	135 145	265 140	330 134	390 130	445 118	
70	120 170	245 169	315 165	370 160		
75		235 176	300 170			

BMR-500 Pressure (MPa)

Flow (L/min)	3	5	7	8	9
10	200 29	345 27	462 26	582 24	635 22
20	199 39	340 38	455 37	575 36	625 34
30	190 59	328 58	447 57	566 56	626 54
40	188 78	319 77	437 76	556 75	616 73
50	180 97	310 96	427 95	546 95	606 93
60	175 118	300 117	416 115	432 114	597 112
70	170 138	290 137	413 135	421 133	586 131
75	160 158	278 157	402 155		

Torque(N.M): 606
Speed (RPM): 93

Continuous

Intermittent

Installation Dimensions for BMR Series

F1-F3

2-hole diamond flange with S-type oil port

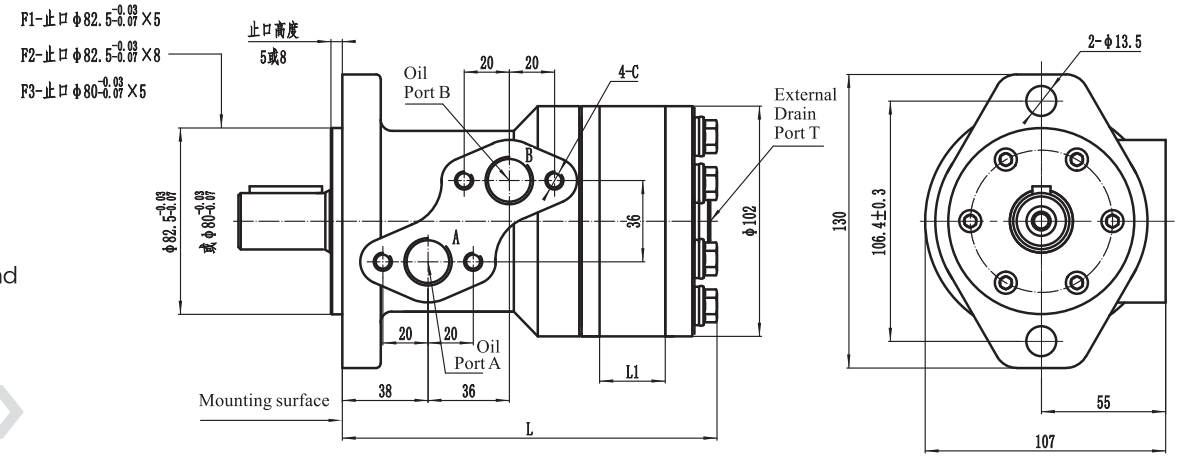

F4-F5

4-hole diamond flange with S-type oil port

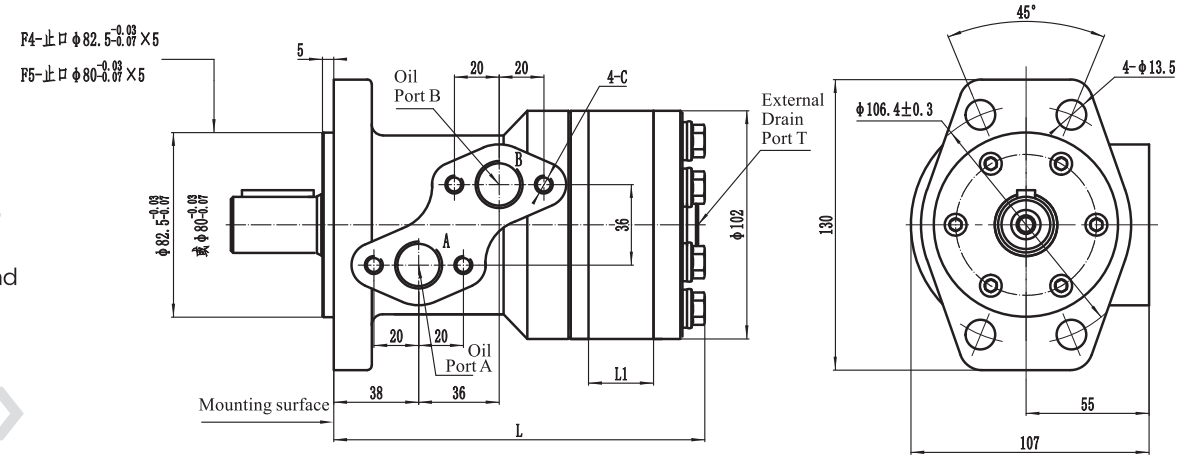

F6-F7

2-hole diamond flange with vertical oil port

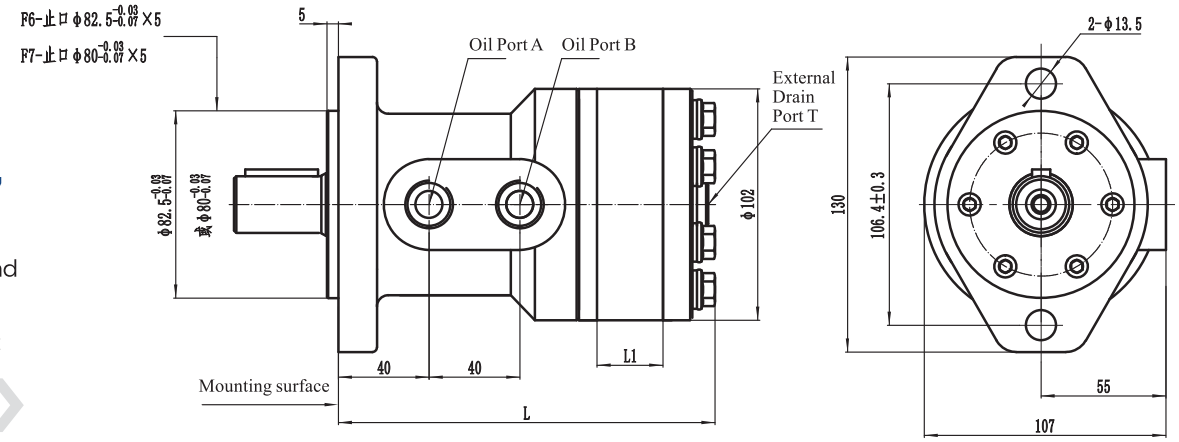

Installation Dimensions for BMR Series

F8-F9

4-hole square flange with vertical oil port

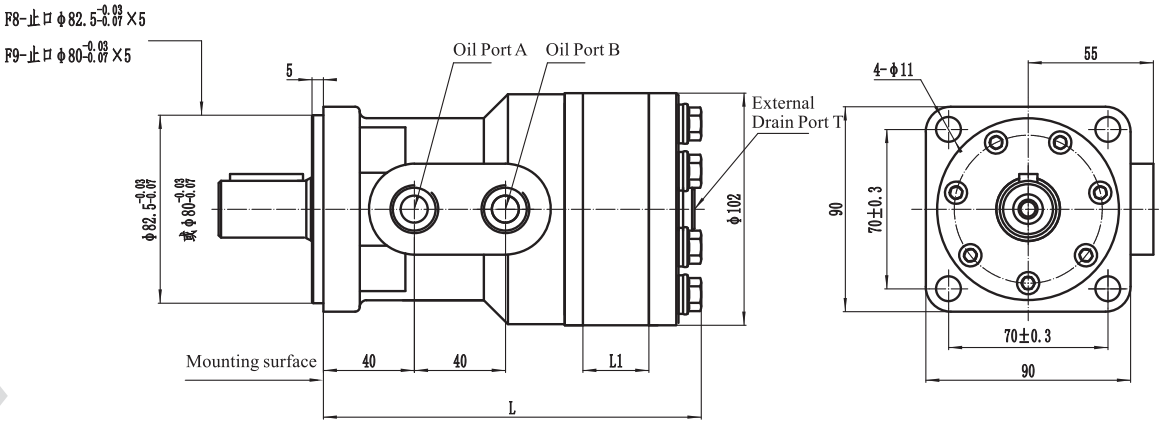

F10-F11

4-hole rectangular flange with vertical oil port

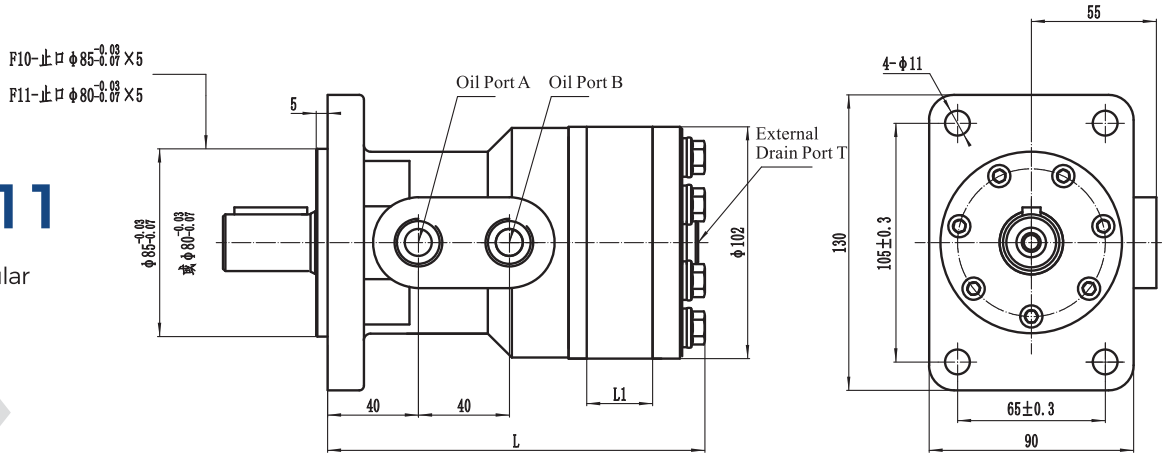

F12

2-hole diamond flange with horizontal and vertical oil port

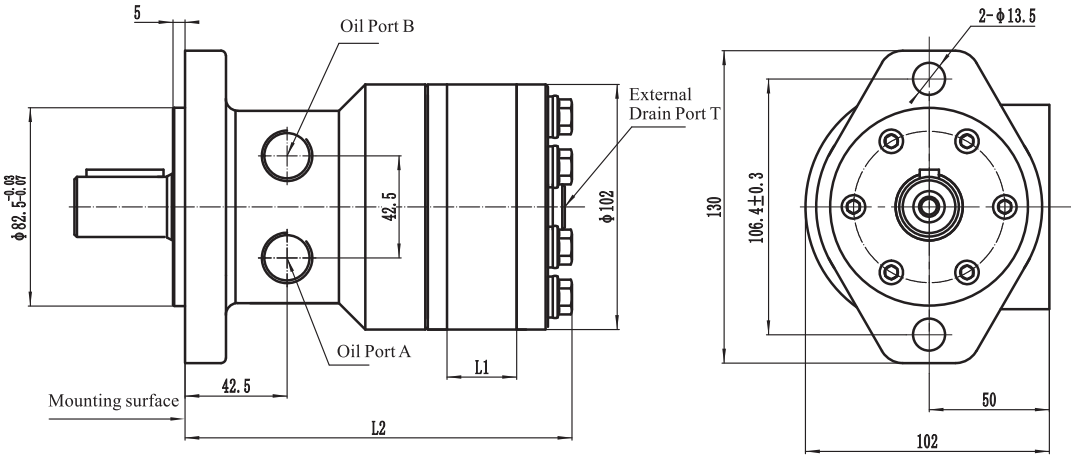

Installation Dimensions for BMR Series

F13

2-hole diamond flange with horizontal and vertical oil port

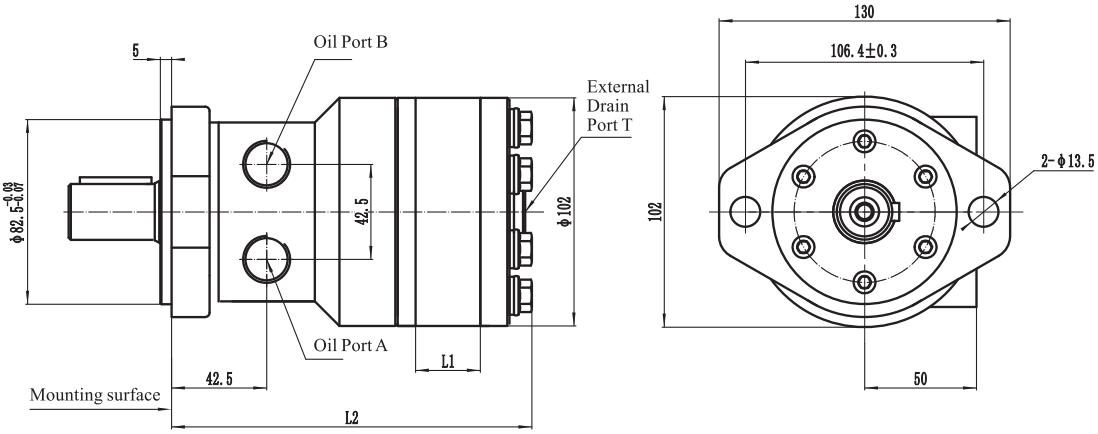

F14

Wheel motor

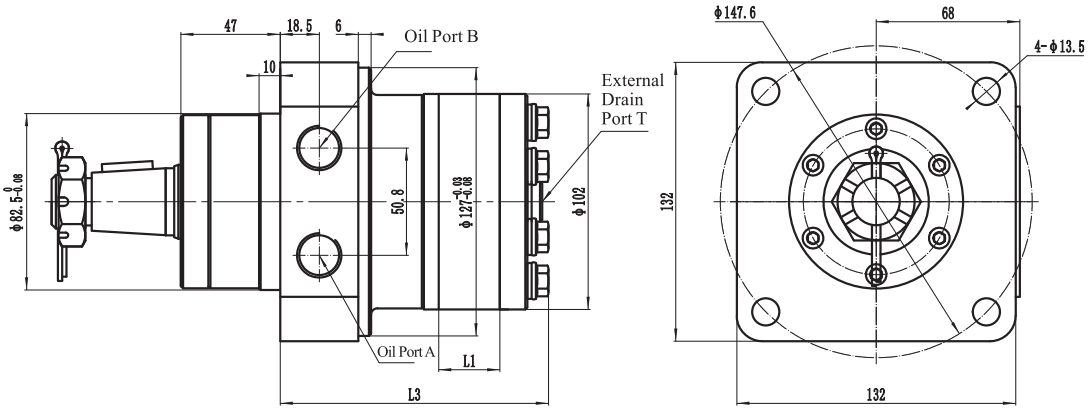

Model	BMR-50	BMR-63	BMR-80	BMR-100	BMR-125	BMR-160	BMR-200	BMR-250	BMR-315	BMR-400	BMR-500
L1	9	11	14.5	17.8	23	29	37	46	57	72	90
L	146	148	152	155	160	166	174	183	194	209	227
L2	141	143	147	150	155	161	169	178	189	204	222
L3	113	115	119	122	127	127	141	150	161	176	194

Common Thread for A/B		Common Thread for External Drain Port T		Thread C	
A/B-1	G1/2	T1	G1/4	C1	None
A/B-2	7/8-14UNF O-ring	T2	7/16-20UNF 0-ring	C2	M8
A/B-3	1/2-14NPTF	T3	M14x1.5		
A/B-4	M18x1.5				
A/B-5	M20x1.5				
A/B-6	G1/2 0-ring				

Connection Dimensions for BMR Shaft Extension

P1

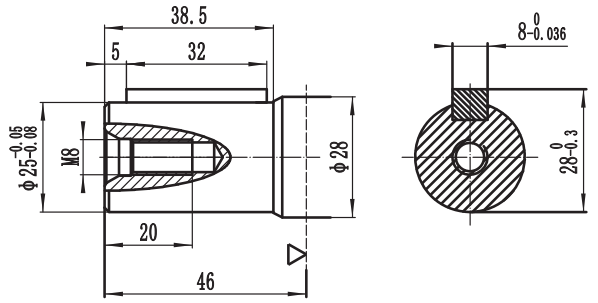

Φ25 Cylindrical Shaft
Flat Key 8x7x32

P4

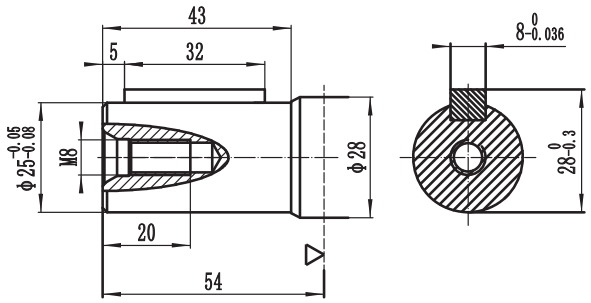

Φ25 Cylindrical Shaft
Flat Key 8x7x32

P2

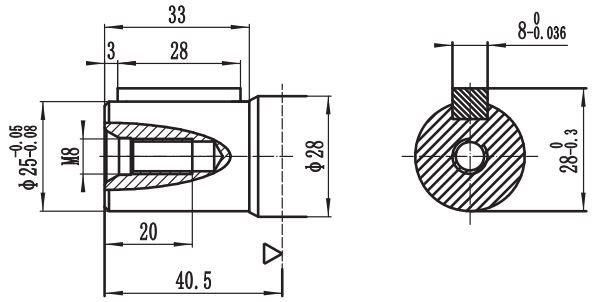

Φ25 Cylindrical Shaft
Flat Key 8x7x28

P5

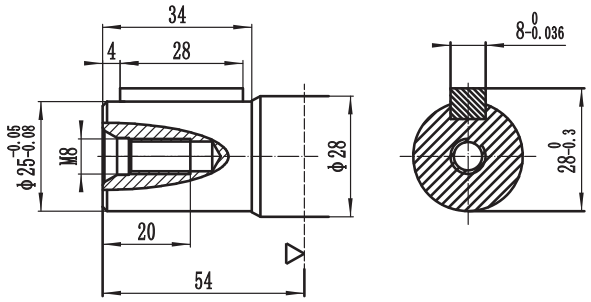

Φ25 Cylindrical Shaft
Flat Key 8x7x28

P3

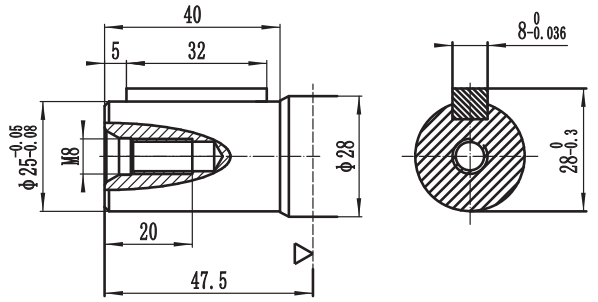

Φ25 Cylindrical Shaft
Flat Key 8x7x32

P6

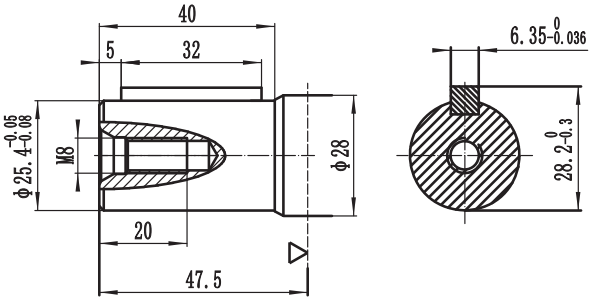

Φ25.4 Cylindrical Shaft
Flat Key 6.35x6.35x32

Motor Mounting Surface ▷

Connection Dimensions for BMR Shaft Extension

H1

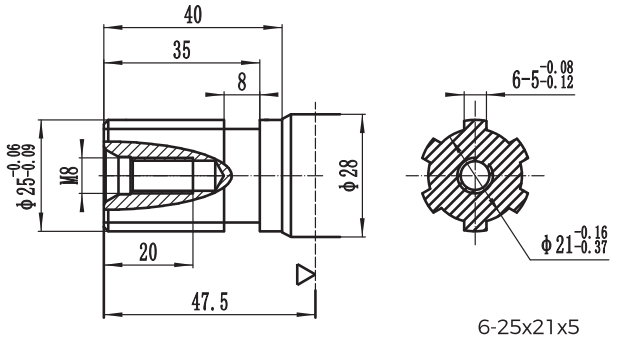

6-25x21x5
Φ25 Rectangular Spline Shaft

H4

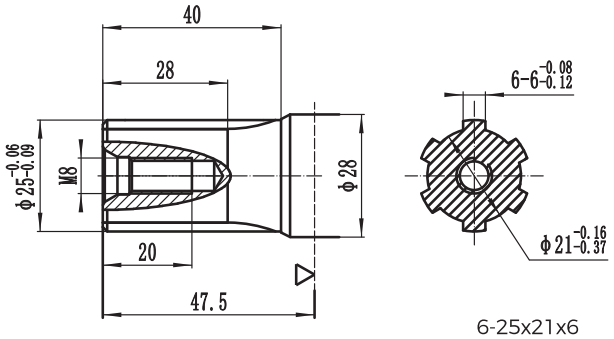

6-25x21x6
Φ25 Rectangular Spline Shaft

H2

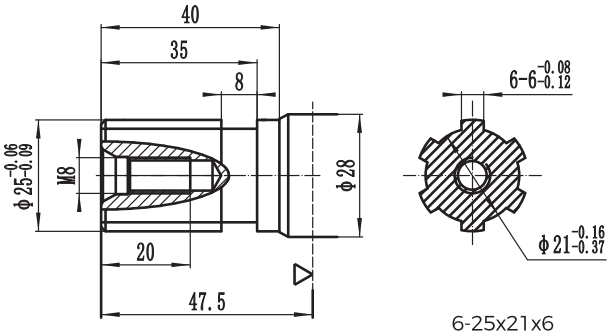

6-25x21x6
Φ25 Rectangular Spline Shaft

H5

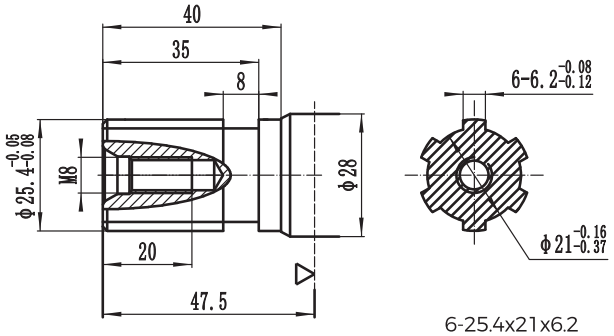

6-25.4x21x6.2
Φ25.4 Rectangular Spline Shaft

H3

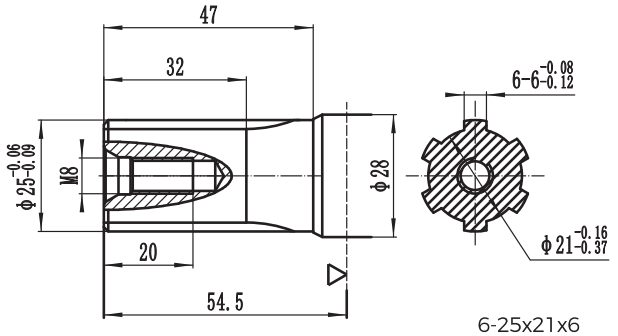

6-25x21x6
Φ25 Rectangular Spline Shaft

H6

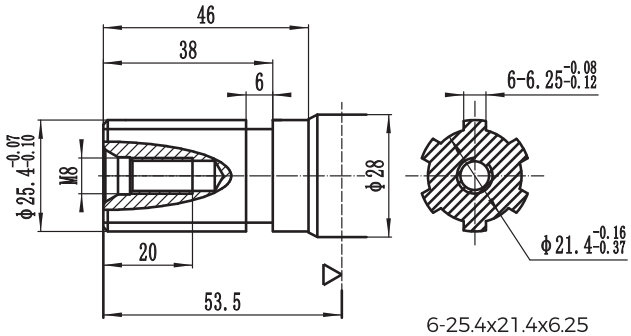

6-25.4x21.4x6.25
Φ25.4 Rectangular Spline Shaft

Motor Mounting Surface

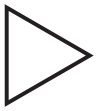

Connection Dimensions for BMR Shaft Extension

H7

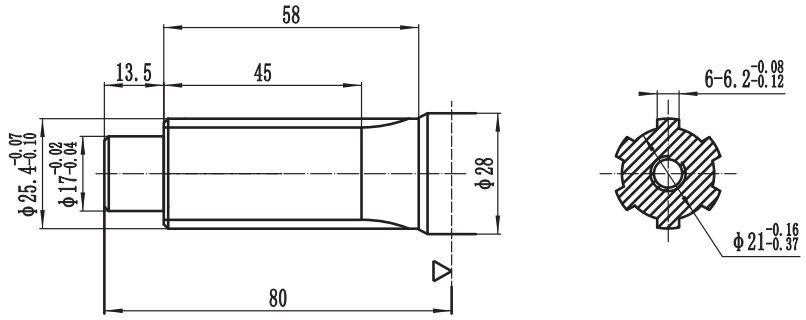

6-25.4x21x6.2
Φ25.4 Rectangular Spline Shaft

C1

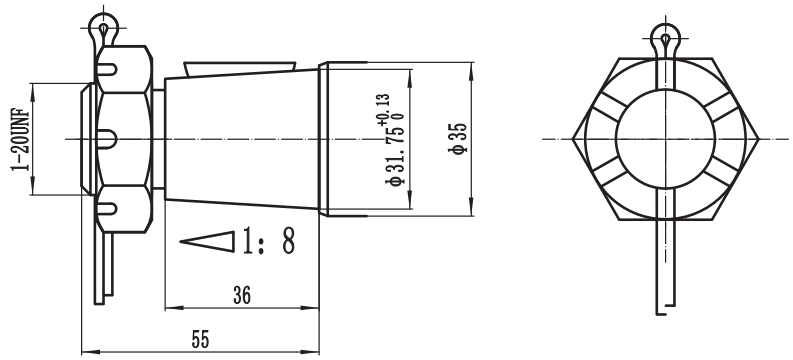

Φ31.75 Tapered Shaft
Taper 1: 8

C2

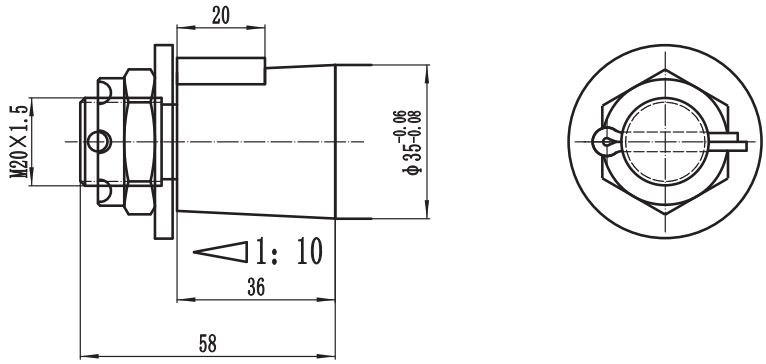

Φ35 Tapered Shaft
Taper 1: 10

Motor Mounting Surface

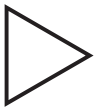

Output Shaft Rotation Direction: Standard

When facing the motor shaft extension direction, the shaft rotates:

When oil port A is at high pressure, the output shaft rotates clockwise.

When oil port B is at high pressure, the output shaft rotates counterclockwise.

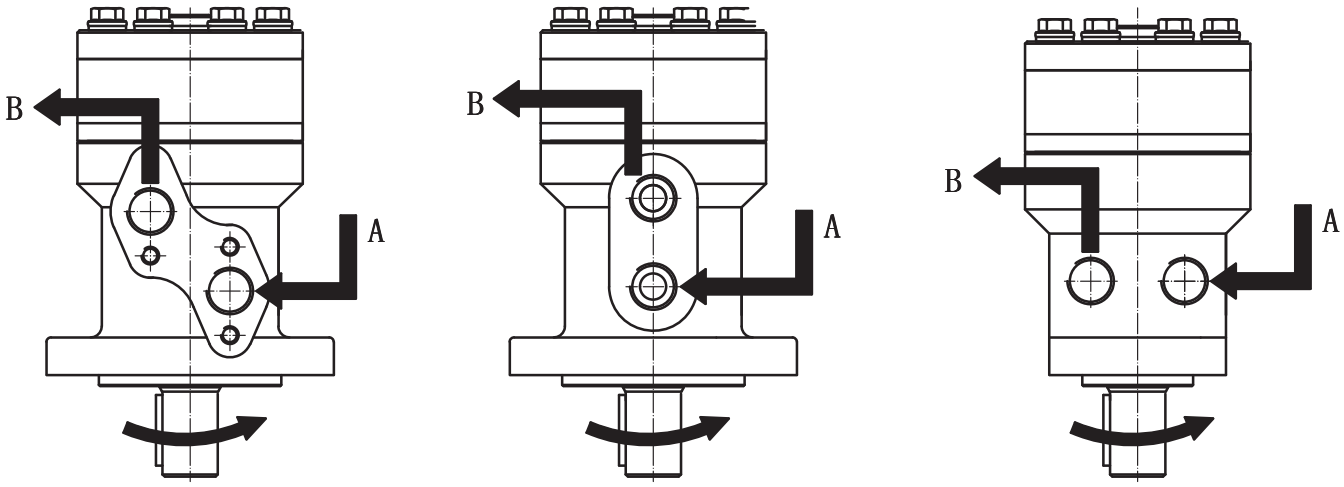

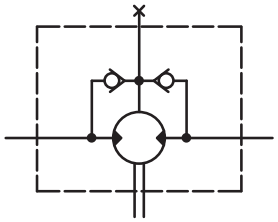

Motor Principle Diagram

$$F_r = \frac{800}{n} \cdot \frac{25000}{95+L} \text{ daN}$$

Fr = Radial Force (daN)

L = Distance (mm)

n = Speed (rpm)

L = 27mm

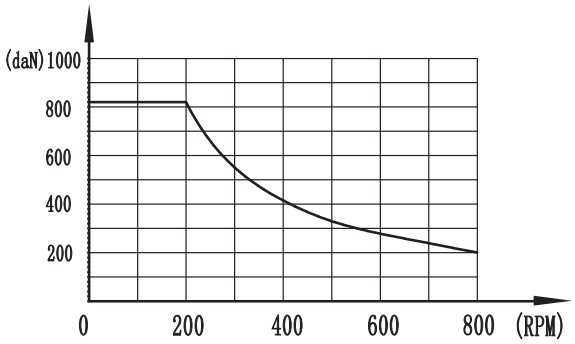

Output Shaft Radial Force Conditions

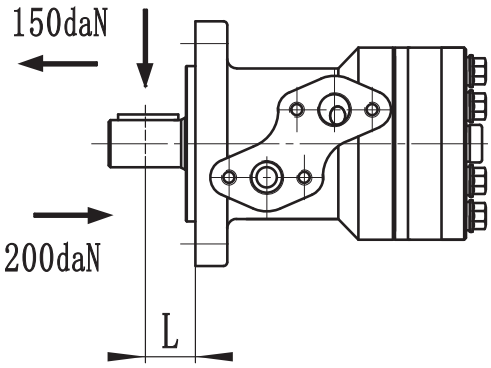

Ordering Information for Cycloidal Hydraulic Motor of BMR Series

Ordering Information:

1	2	3	4	5	6	7	8
BMR –	–	–	–	–	–	–	

1	Product Series	BMR										
2	Displacement (ml/r)	50	63	80	100	125	160	200	250	315	400	500

3	
Code	Installation Flange, Mount Stopper
F1	2-Ø13.5 2-hole diamond flange with S-type oil port, Installation Stopper Ø82.5×5
F2	2-Ø13.5 2-hole diamond flange with S-type oil port, Installation Stopper Ø82.5×8
F3	2-Ø13.5 2-hole diamond flange with S-type oil port, Installation Stopper Ø80×5
F4	4-Ø13.5 4-hole diamond flange with S-type oil port, stopper installation Ø82.5×5
F5	4-Ø13.5 4-hole diamond flange with S-type oil port, Installation Stopper Ø80×5
F6	2-Ø13.5 2-hole diamond flange with vertical oil port, Installation Stopper Ø82.5×5
F7	2-Ø13.5 2-hole diamond flange with vertical oil port, Installation Stopper Ø80×5
F8	4-Ø11 4-hole square flange with vertical oil port, Installation Stopper Ø82.5×5
F9	4-Ø11 4-hole square flange with vertical oil port, Installation Stopper Ø80×5
F10	4-Ø11 4-hole square flange with vertical oil port, Installation Stopper Ø85×5
F11	4-Ø11 4-hole square flange with vertical oil port, Installation Stopper Ø80×5
F12	2-Ø13.5 2-hole diamond flange with horizontal and vertical oil port, Installation Stopper Ø82.5×5
F13	2-Ø13.5 2-hole diamond flange with horizontal and vertical oil port (90 degrees), Installation Stopper Ø82.5×5
F14	4-Ø13.5 Wheel motor, Installation Stopper Ø82.5×10

4	
Code	Output Shaft
P1	Ø25 flat key shaft, flat key 8×7×32, shaft length 38.5
P2	Ø25 flat key shaft, flat key 8×7×28, shaft length 33
P3	Ø25 flat key shaft, flat key 8×7×32, shaft length 40
P4	Ø25 flat key shaft, flat key 8×7×32, shaft length 43
P5	Ø25 flat key shaft, flat key 8×7×28, shaft length 34
P6	Ø25.4 flat key shaft, flat key 6.35×6.35×32, shaft length 40
H1	Ø25 rectangular spline shaft, 6-25×21×5, shaft length 40
H2	Ø25 rectangular spline shaft, 6-25×21×6, shaft length 40
H3	Ø25 rectangular spline shaft, 6-25×21×6, shaft length 47
H4	Ø25 rectangular spline shaft, 6-25×21×6, shaft length 40
H5	Ø25.4 rectangular spline shaft, 6-25.4×21×6.2, shaft length 40
H6	Ø25.4 rectangular spline shaft, 6-25.4×21.4×6.25, shaft length 46
H7	Ø25.4 rectangular spline shaft, 6-25.4×21×6, shaft length 58
C1	Ø31.75 tapered shaft, taper 1:8, shaft length 36
C2	Ø35 tapered shaft, taper 1:10, shaft length 36

5	
Code	Oil Port
A/B-1	G1/2
A/B-2	7/8-14UNF O-ring
A/B-3	M18x.5
A/B-4	M22x1.5
A/B-5	1/2-14NPTF
A/B-6	G1/2 0-ring

6	
Code	External Drain Port
T0	None
T1	G1/4
T2	7/16-20UNF 0-ring
T3	M14X1.5

7	
Code	Thread
C1	None
C2	M8

8	
Code	Rotation
None	Standard
R	Reverse

Hydraulics Orbital Motor of BM3 Series

- Shaft flow distribution structure.
- Equipped with deep groove ball bearings, capable of withstanding certain axial and radial forces.
- Pilot-type rotor and stator structure, offering higher oil distribution accuracy and mechanical efficiency.
- Uses special seals and built-in one-way valves, capable of withstanding higher back pressure, and allows for series or parallel usage.
- Multiple flange, output shaft, and oil port installation configurations available.

BM3 Technical Parameters

Displacement (ml/r)		100	125	160	200	250	315	400
Flow (L/min)	Maximum Continuous	50	50	50	50	50	50	50
	Intermittent	60	60	60	60	60	60	60
Speed (rpm)	Maximum Continuous	400	370	250	200	175	160	120
	Intermittent	500	420	315	250	225	200	140
Pressure (MPa)	Maximum Continuous	12.5	12.5	11	11	10	10	9
	Intermittent	14	13	12.5	12.5	12	12	11
Torque (N.m)	Maximum Continuous	175	230	271	328	384	480	500
	Intermittent	200	340	379	355	410	509	628

- The maximum continuous value refers to the maximum value at which the motor of this displacement can operate continuously.
- The intermittent value refers to the maximum value at which the motor of this displacement can operate for 6 seconds within 1 minute.
- The motor should not be used simultaneously at maximum pressure and maximum speed.
- Recommended oil: Anti-wear hydraulic oil, with a solid contamination level of ISO 18/15 for the working fluid.
- The maximum working oil temperature is 80˚C.
- The motor can be used in series or parallel, and when used in series or parallel, the back pressure should not exceed 5 MPa. If exceeded, it is recommended to connect an External Drain Port pipe, which should preferably be directly connected to the oil tank.
- The motor should undergo a break-in period before operating at full load, recommended to run at less than 30% of the maximum working pressure for 1 hour.

Performance Parameters Table for BM3 Series

Continuous

Intermittent

BM3-100 Pressure (MPa)

Flow (L/min)	3	5	7	8	10	12.5	15
8	35 75	59 74	83 72	97 70	121 69	147 66	
16	35 150	60 147	85 144	98 141	125 138	148 133	173 128
22	34 207	59 202	84 198	98 194	125 189	147 183	170 178
30	33 282	57 276	82 270	95 267	123 264	143 258	168 248
36	32 338	55 331	80 324	93 320	120 317	140 309	165 295
45	30 423	52 414	78 450	90 400	113 396	136 387	
55	25 517	49 506	76 495	88 489	108 484	134 473	
65		46 611	75 598	85 585	105 578		

BM3-160 Pressure (MPa)

Flow (L/min)	3	5	7	8	10	12.5
8	56 47	94 46	134 45	155 44	193 42	
16	56 94	95 93	135 91	156 90	195 85	238 82
22	55 138	94 137	135 135	155 134	193 130	236 125
30	54 176	93 175	135 173	154 170	193 166	235 160
36	53 212	92 211	133 210	153 209	191 205	232 200
45	52 264	90 263	130 260	150 259	187 255	228 250
55	50 323	86 322	125 319	147 318	180 313	
65		82 382	120 380	141 378		

BM3-200 Pressure (MPa)

Flow (L/min)	3	5	7	8	10	11	12.5
8	70 38	118 37	167 35	193 34	242 30	258 26	
16	72 75	120 74	170 72	195 71	245 68	260 66	294 60
22	71 103	120 102	168 100	193 99	244 95	253 94	292 88
30	68 169	118 140	166 138	191 137	242 134	251 131	288 126
36	65 212	115 168	162 166	187 164	237 160	248 156	280 150
45		110 211	156 209	182 208	232 204	242 200	
55		105 258	152 256	180 255	230 250	238 248	
65		100 306	145 305	175 302	225 300		

BM3-250 Pressure (MPa)

Flow (L/min)	3	5	7	8	10	11	12.5
8	87 30	147 29	208 28	242 27	302 25		
16	88 60	150 59	210 58	245 57	306 55	323 50	362 48
22	86 83	150 82	210 80	243 78	304 75	320 73	360 70
30	84 113	148 112	208 110	240 109	300 105	315 103	355 100
36	80 135	143 134	203 132	235 131	295 127	310 125	351 120
45	75 169	140 168	200 166	230 165	290 160	305 158	
55		135 206	195 205	225 203	284 200		
65		130 244	190 243	220 240			

BM3-315 Pressure (MPa)

Flow (L/min)	3	4	6	8	10	12.5
8	110 24	148 23	225 21	305 17	380 13	
16	111 48	148 47	227 45	308 42	380 38	450 32
22	110 66	147 65	226 62	307 61	379 58	448 50
30	109 90	145 89	222 87	305 85	377 81	444 77
36	105 107	141 106	219 104	300 102	372 100	440 97
45	100 134	137 133	215 131	295 128	367 125	
55		130 164	210 162	290 160	360 157	
65			200 190	285 189		

Torque(N.M): 444
Speed (RPM): 77

BM3-400 Pressure (MPa)

Flow (L/min)	3	4	6	8	9	11
8	139 19	188 18	286 17	387 15	435 12	
16	139 38	190 37	288 35	390 33	436 32	513 30
22	138 53	188 52	288 50	390 48	435 47	510 45
30	137 71	186 70	286 68	388 66	433 64	508 60
36	135 85	182 84	282 82	385 80	430 78	505 73
45	130 106	176 105	277 103	380 100	424 98	
55	123 129	170 128	270 126	372 124		
65		160 150	260 148			

Bm3 Installation Dimensions

F1

4-hole
square flange

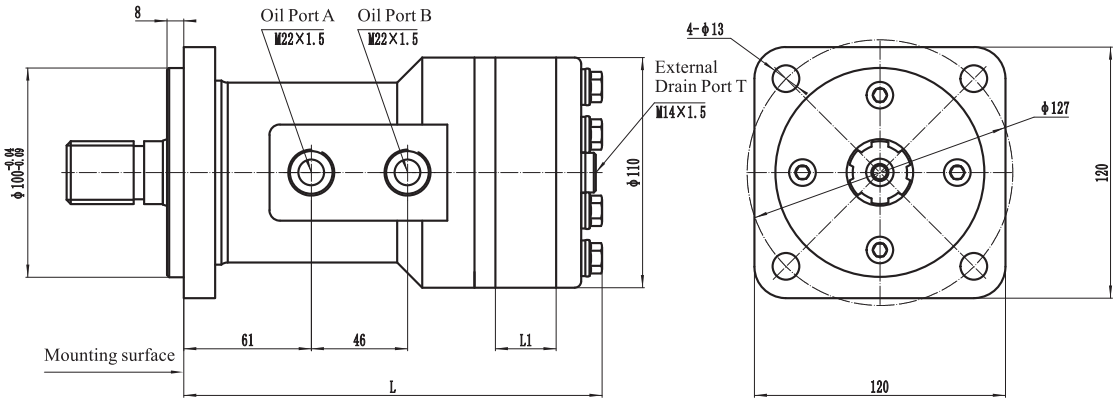

F2

8-hole
square flange

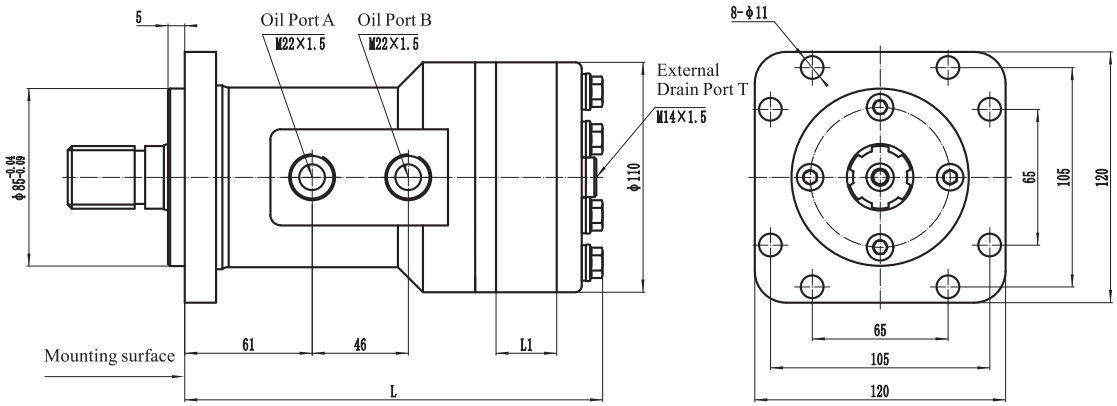

Model	BM3-100	BM3-125	BM3-160	BM3-200	BM3-250	BM3-315	BM3-400
L1	17.8	23	29	37	46	57	72
L	189	194	200	208	217	228	243

Connection Dimensions for BM3 Shaft Extension

P1

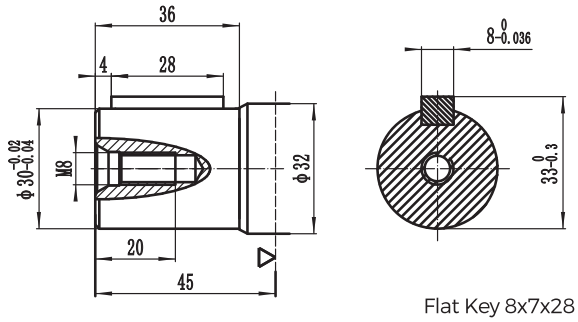

Flat Key 8x7x28
Φ30 Cylindrical Shaft

H1

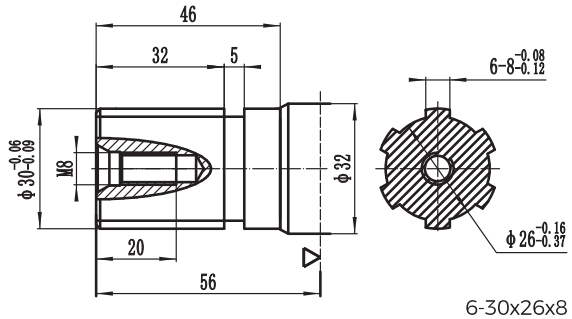

6-30x26x8
Φ30 Rectangular Spline Shaft

H2

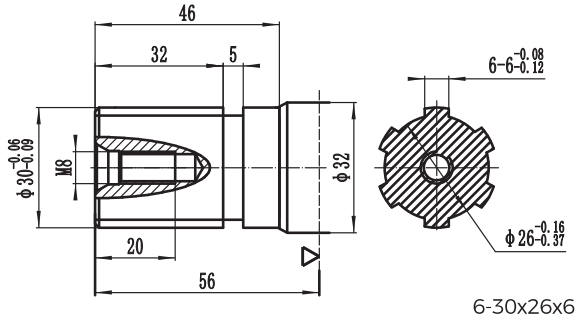

6-30x26x6
Φ30 Rectangular Spline Shaft

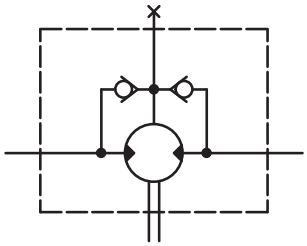

Motor Principle Diagram

Motor Mounting Surface

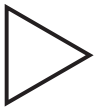

Output Shaft Rotation Direction: Standard

When facing the motor shaft extension direction, the shaft rotates:

When oil port A is at high pressure, the output shaft rotates clockwise.

When oil port B is at high pressure, the output shaft rotates counterclockwise.

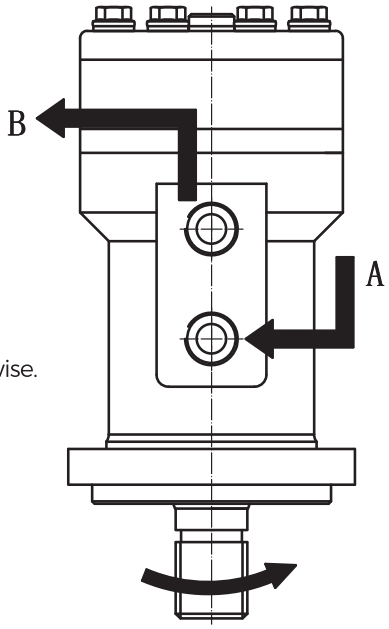

Ordering Information for Cycloidal Hydraulic Motor of BM3 Series

Ordering Information:

1		2		3		4		5		6		7
BM3	–		–		–		–		–		–	

1	Product Series	BM3						
2	Displacement (ml/r)	100	125	160	200	250	315	400

3	
Code	Installation Flanges, Stop Rings
F1	4-Ø13 4-hole square flange with vertical oil port, Installation Stopper Ø100×8
F2	8-Ø11 8-hole square flange with vertical oil port, Installation Stopper Ø85×5

4	
Code	Output Shaft
P1	Ø30 flat key shaft, flat key 8×7×28, shaft length 36
H1	Ø30 rectangular spline shaft, 6-30×26×8, shaft length 46
H2	Ø30 rectangular spline shaft, 6-30×26×6, shaft length 46

5	
Code	Oil Port
A/B-1	M22x1.5

6	
Code	External Drain Port
T0	None
T1	M14x1.5

7	
Code	Rotation
None	Standard
R	Reverse

Hydraulics Orbital Motor of BM4 Series

- Shaft flow distribution structure.
- Equipped with deep groove ball bearings, capable of withstanding certain axial and radial forces.
- Pilot-type rotor and stator structure, offering higher oil distribution accuracy and mechanical efficiency.
- Uses special seals and built-in one-way valves, capable of withstanding higher back pressure, and allows for series or parallel usage.
- Multiple flange, output shaft, and oil port installation configurations available.

BM4 Technical Parameters

Displacement (ml/r)		245	310	390	490	625	800
Flow (L/min)	Maximum Continuous	80	80	80	80	80	80
	Intermittent	100	100	100	100	100	100
Speed (rpm)	Maximum Continuous	320	250	200	156	120	106
	Intermittent	390	300	240	200	150	120
Pressure (MPa)	Maximum Continuous	14	14	14	14	12.5	10
	Intermittent	15	15	15	15	13	12
Torque (N.m)	Maximum Continuous	435	556	698	870	997	1024
	Intermittent	502	664	798	1058	1178	1380

- The maximum continuous value refers to the maximum value at which the motor of this displacement can operate continuously.
- The intermittent value refers to the maximum value at which the motor of this displacement can operate for 6 seconds within 1 minute.
- The motor should not be used simultaneously at maximum pressure and maximum speed.
- Recommended oil: Anti-wear hydraulic oil, with a solid contamination level of ISO 18/15 for the working fluid.
- The maximum working oil temperature is 80˚C.
- The motor can be used in series or parallel, and when used in series or parallel, the back pressure should not exceed 5 MPa. If exceeded, it is recommended to connect an External Drain Port pipe, which should preferably be directly c onnected to the oil tank.
- The motor should undergo a break-in period before operating at full load, recommended to run at less than 30% of the maximum working pressure for 1 hour.

Performance Parameters Table for BM4 Series

Continuous

Intermittent

BM4-245 Pressure (MPa)

Flow (L/min)	3.5	7	9	12	14	17.5	20
5	122 19	248 19	318 18	401 15			
10	129 37	258 36	334 34	426 32	456 31	596 27	
20	127 77	256 77	332 76	430 74	454 66	594 54	693 44
30	124 115	252 114	328 112	426 106	455 97	596 86	695 76
40	114 158	242 158	322 156	421 152	458 142	602 128	690 115
50	106 196	234 196	316 193	412 186	451 175	598 162	688 147
60	96 232	222 231	305 227	403 218	448 208	596 192	678 180
70	83 275	214 274	290 274	392 268	443 254	582 237	669 221
75	75 290	206 290	282 288	382 280	438 266	573 252	661 236
80	70 303	195 303	275 297	370 291	436 280	568 264	650 248
90		180 348	258 346	355 340	430 325	552 308	634 293

BM4-310 Pressure (MPa)

Flow (L/min)	3.5	7	10	13.5	15	17.5	20
5	154 16	325 13					
10	162 29	343 26	415 20	557 16			
20	168 62	350 61	468 51	582 48	629 41	733 32	806 20
30	166 93	345 90	412 88	581 77	630 68	742 62	823 48
40	155 126	338 126	463 120	576 112	627 100	738 90	825 75
50	142 159	326 156	456 150	569 142	623 125	729 116	824 99
60	121 186	312 186	440 180	556 170	645 155	714 142	813 125
70	105 223	300 222	426 216	540 206	632 189	704 178	802 160
75	96 237	289 234	420 225	530 215	624 198	696 186	795 168
80	84 245	278 244	408 263	519 228	612 212	689 198	783 176
90	63 282	258 280	388 275	496 266	593 248	668 234	760 209

BM4-390 Pressure (MPa)

Flow (L/min)	3.5	6	10.5	12.5	15	19
5	196 12	349 11	518 10			
10	205 23	362 22	545 21	701 18	804 12	
20	208 49	365 48	542 46	707 41	812 37	985 33
30	202 73	356 72	541 70	706 64	806 56	984 52
40	196 99	345 98	530 96	702 87	802 78	972 72
50	174 124	332 122	519 118	687 107	796 98	957 92
60	155 147	320 140	500 142	668 130	792 116	945 107
70	138 174	305 173	480 170	647 155	790 142	923 130
75	132 182	295 182	467 178	634 165	788 150	912 138
80	114 193	278 192	452 188	622 175	772 158	895 146
90	92 220	255 220	436 215	596 203	752 185	882 166

BM4-490 Pressure (MPa)

Flow (L/min)	2.5	5	8.5	10	12.5	16
5	164 9	318 9	517 8			
10	178 19	335 18	556 17	669 16	790 14	968 10
20	178 42	330 42	560 41	672 38	798 36	986 30
30	173 63	320 63	552 61	661 58	792 54	981 48
40	162 85	310 85	542 88	654 79	782 75	972 68
50	146 103	298 102	524 102	635 98	769 94	955 86
60	122 124	276 123	503 123	615 118	746 113	933 104
70	98 147	256 147	482 147	598 142	728 136	918 124
75	80 156	241 155	470 155	583 152	715 144	901 132
80	62 166	223 166	456 166	572 158	700 153	882 141
90	36 176	202 175	422 172	550 166	672 160	870 158

BM4-625 Pressure (MPa)

Flow (L/min)	3.5	5	7	8.5	10.5	14
5	250 7	380 7	510 6	640 5	755 4	
10	260 15	395 14	535 13	670 12	795 10	1060 8
20	275 30	425 30	570 28	710 27	850 25	1065 22
30	295 45	450 44	605 44	755 43	925 42	1270 37
40	297 60	450 59	610 58	765 56	920 55	1330 52
50	285 76	445 75	605 75	760 73	915 70	1325 67
60	285 93	440 92	595 91	755 90	915 88	1325 84
70	280 106	430 105	585 105	745 102	905 100	1320 95
75	275 116	415 115	575 114	735 113	895 112	1315 106
80	240 124	400 123	560 122	720 121	880 119	1300 114
90	225 142	380 141	540 139	700 138	855 137	1250 131

Torque(N.M): 1325
Speed (RPM): 67

BM4-800 Pressure (MPa)

Flow (L/min)	3.5	5	7	8.5	10.5	13
5	420 6	590 6	775 5	958 4		
10	420 12	594 12	790 11	972 10	1176 9	1407 7
20	435 24	608 23	840 21	1020 21	1204 20	1428 17
30	420 36	596 35	830 35	1005 34	1204 33	1412 29
40	390 48	595 47	796 47	975 46	1190 45	1410 43
50	380 60	545 59	780 58	960 56	1176 54	
60	360 74	525 73	765 71	945 70	1172 69	
70	340 84	515 83	750 82	932 80	1163 77	
75	325 92	510 91	732 89	910 88	1140 87	
80	315 96	475 96	722 95	865 93	1126 91	
90		460 106	700 104	860 102		

Installation Dimensions for BM4 Series

F1

2-hole diamond flange with S-type oil port

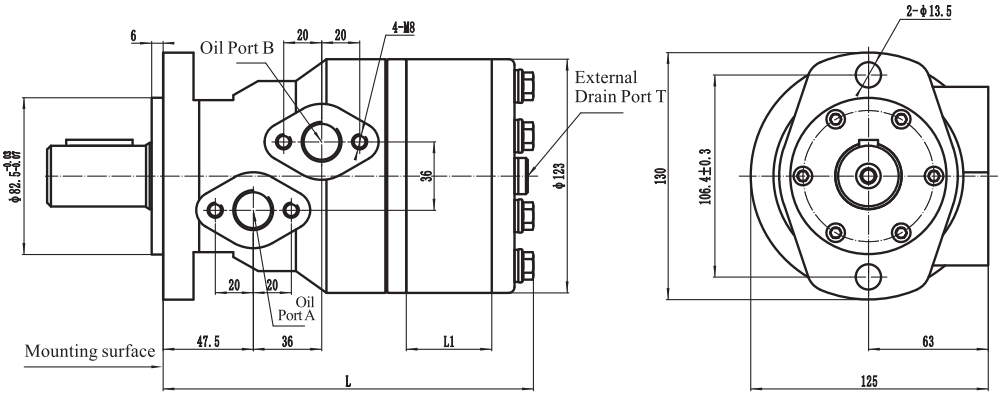

F2

4-hole diamond flange with S-type oil port

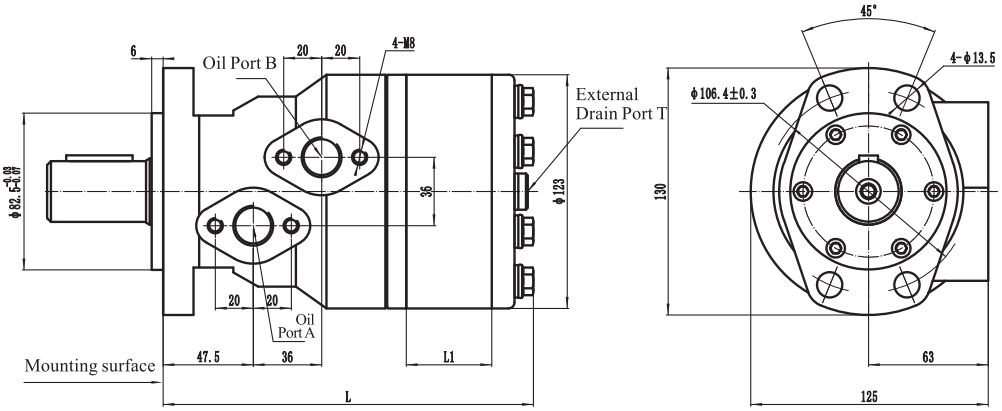

F3

6-hole diamond flange with S-type oil port

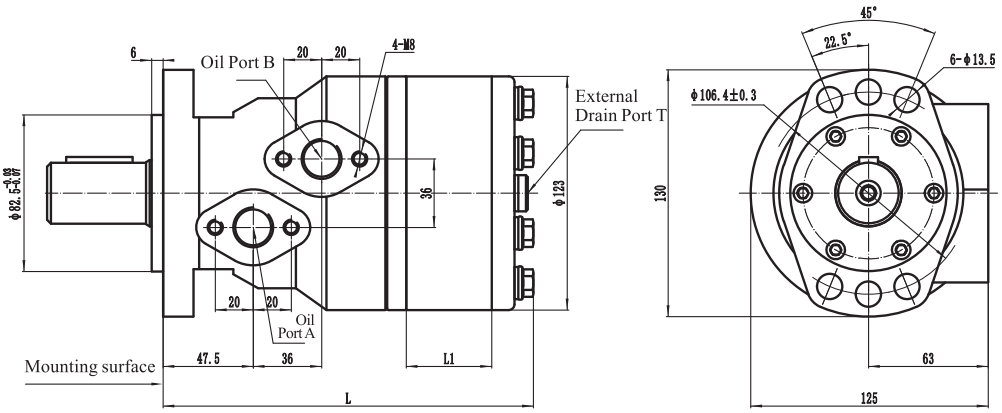

Model	BM4-245	BM4-310	BM4-390	BM4-490	BM4-625	BM4-800
L1	27.3	34.5	45	54.4	69	90
L	178	185	195	205	219	240

Installation Dimensions for BM4 Series

F4

2-hole diamond flange with horizontal and vertical oil port

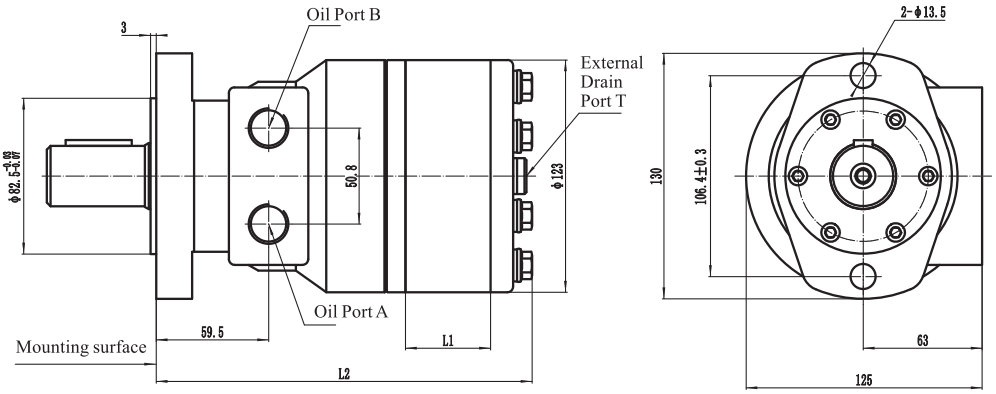

F5

4-hole diamond flange with horizontal and vertical oil port

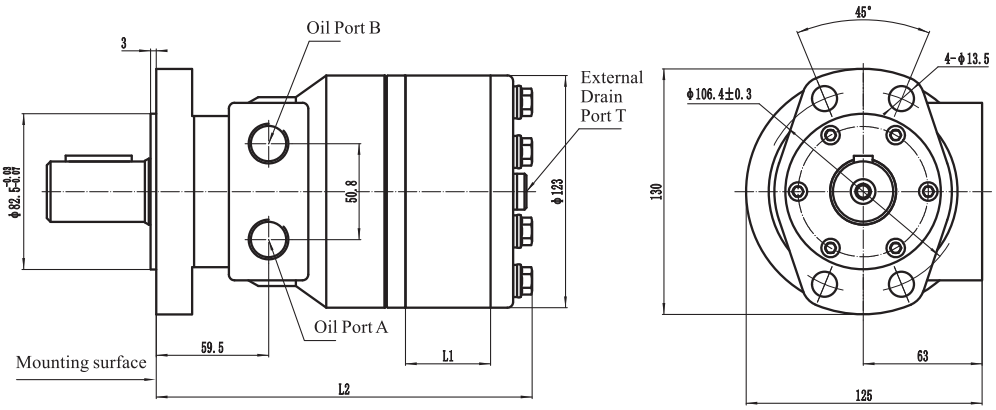

F6

6-hole diamond flange with horizontal and vertical oil port

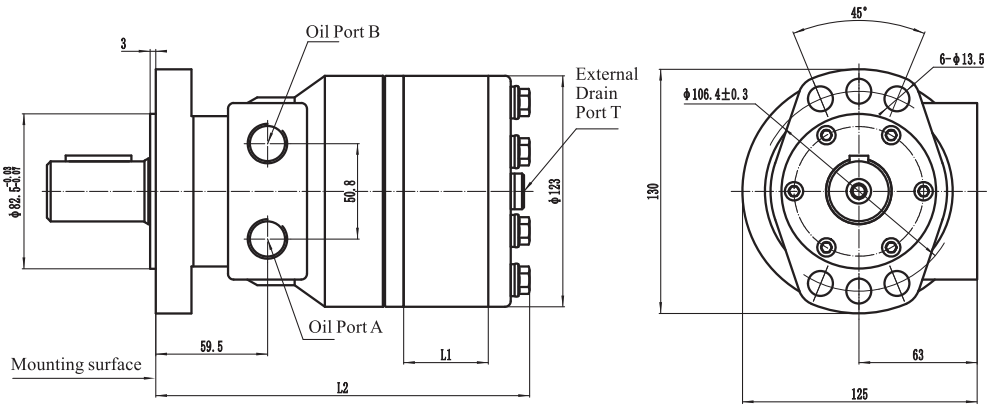

Model	BM4-245	BM4-310	BM4-390	BM4-490	BM4-625	BM4-800
L1	27.3	34.5	45	54.4	69	90
L2	182	189	199	209	223	244

Installation Dimensions for BM4 Series

F7

4-hole large square flange

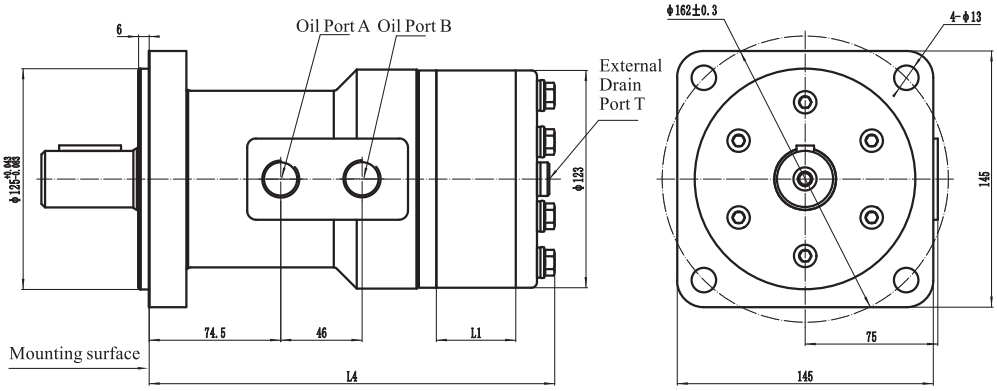

F8

4-hole small square flange

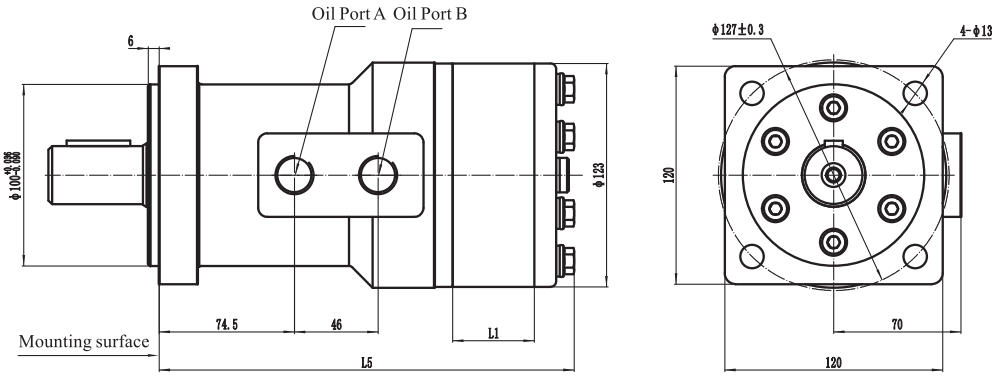

F9

Wheel motor

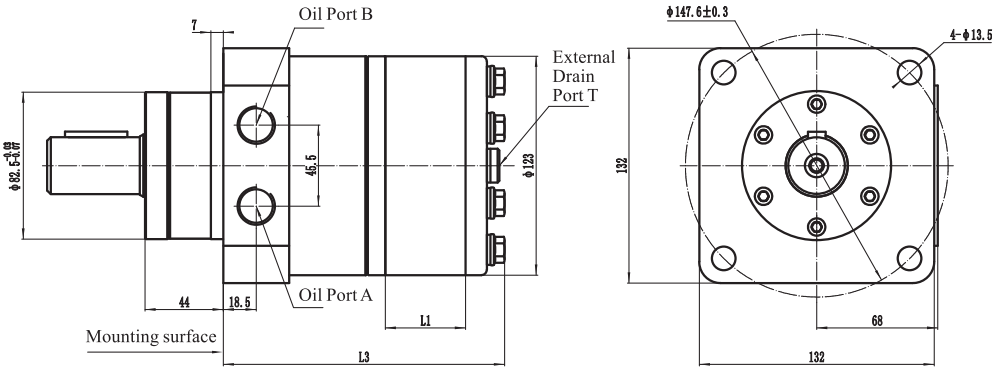

Model	BM4-245	BM4-310	BM4-390	BM4-490	BM4-625	BM4-800
L1	27.3	34.5	45	54.4	69	90
L3	141	148	158	168	182	203
L4	213	220	230	240	254	275
L5	212	219	229	239	253	274

Installation Dimensions for BM4 Series

F10

4-Ø12.5
Rotary motor

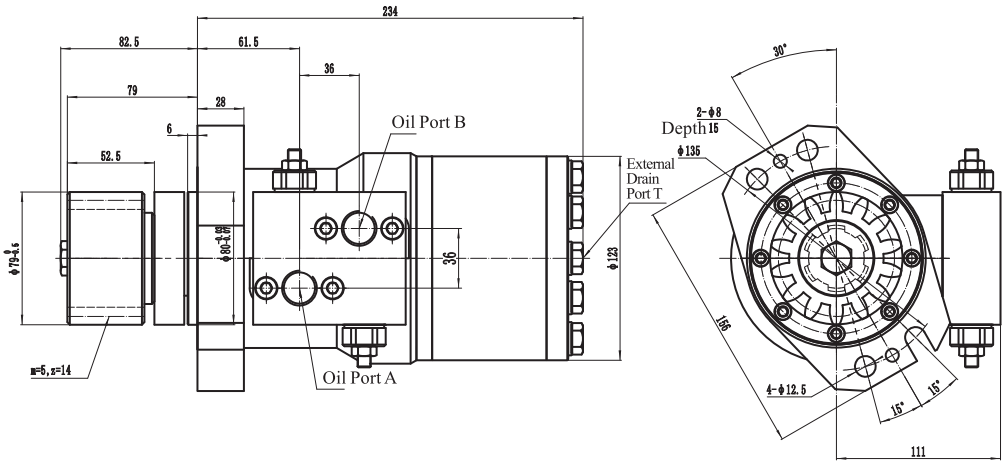

F11

6-Ø12.5
Rotary motor

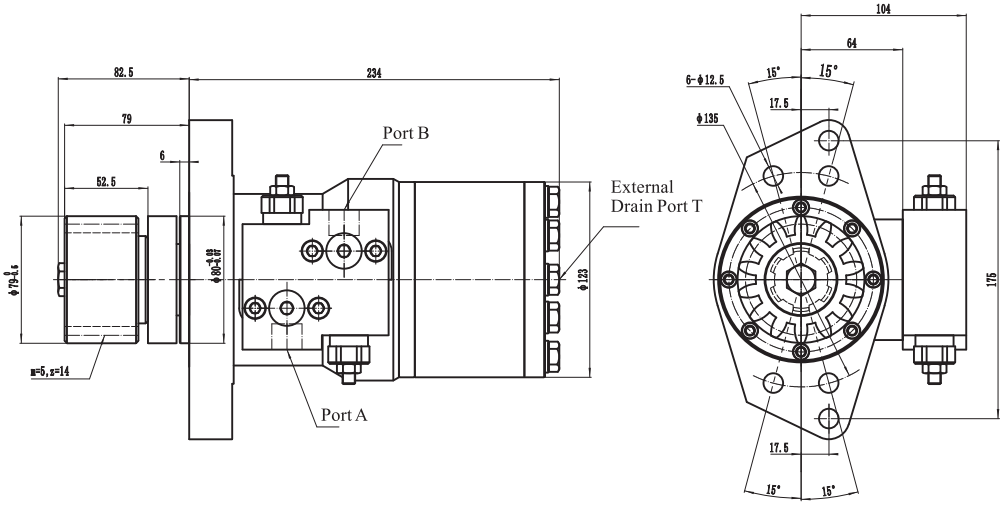

F12

4-M12
Rotary motor

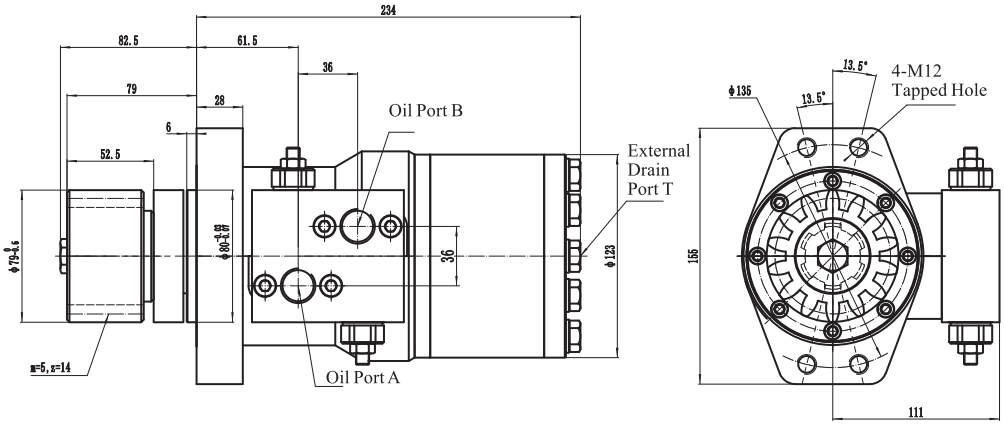

Installation Dimensions for BM4 Series

F13

8-Ø13.5
Rotary motor

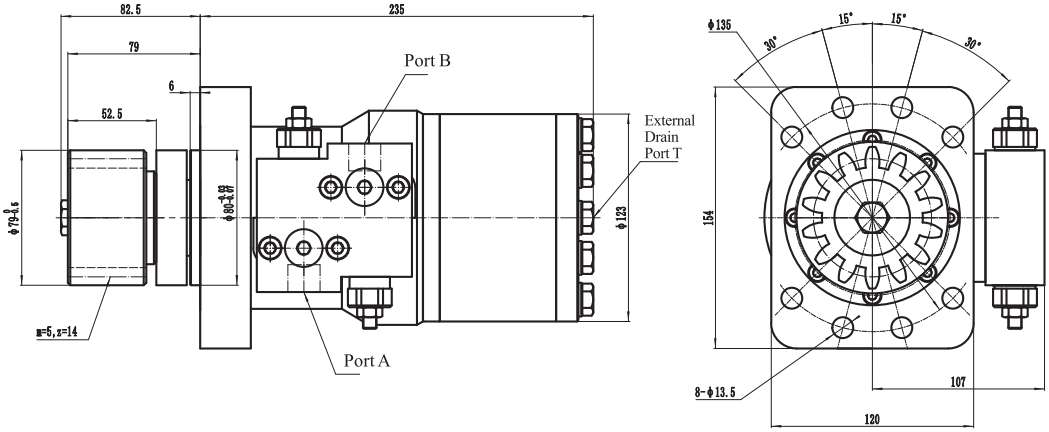

F14

4-M12
Rotary motor

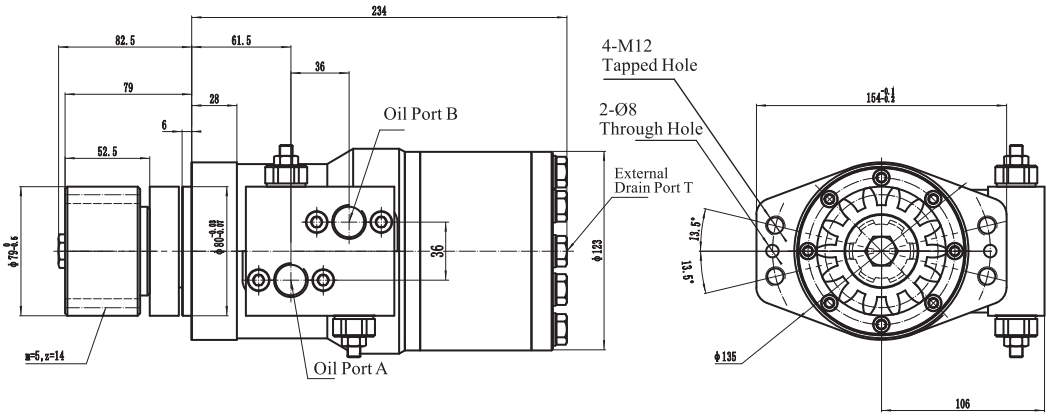

A/B Common Threads		Common Threads for External Drain Port T	
A/B-1	M27x2	T0	None
A/B-2	M22x1.5	T1	G1/4
A/B-3	G3/4	T2	7/16-20UNF 0-ring
A/B-4	G1/2	T3	M14x1.5
A/B-5	G3/8		
A/B-6	7/8-14UNF O-ring		

Connection Dimensions for BM4 Shaft Extension

P1

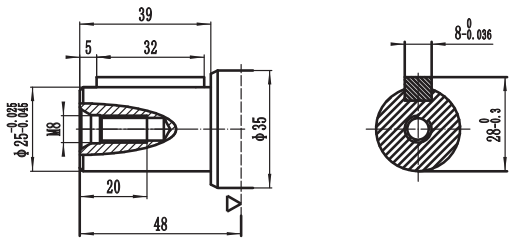

Φ25 Cylindrical Shaft
Flat Key 8x7x32

P4

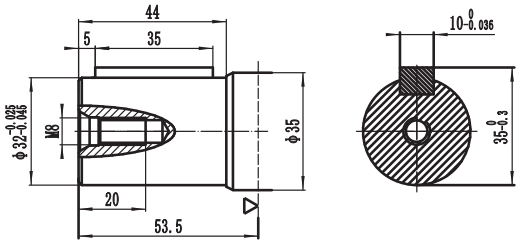

Φ32 Cylindrical Shaft
Flat Key 10x8x35

P2

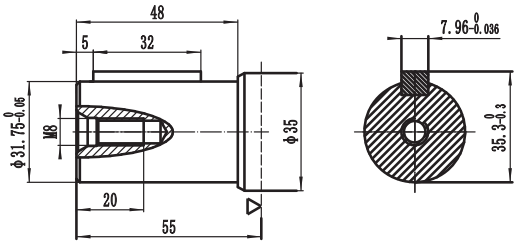

Φ31.75 Cylindrical Shaft
Flat Key 7.96x7.96x32

P5

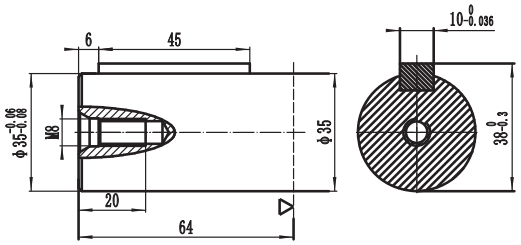

Φ35 Cylindrical Shaft
Flat Key 10x8x45

P3

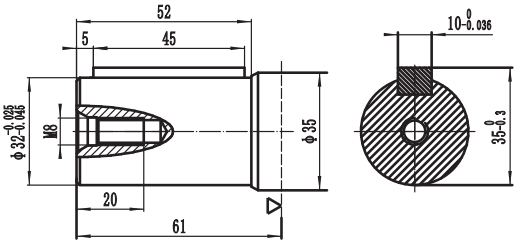

Φ32 Cylindrical Shaft
Flat Key 10x8x45

P6

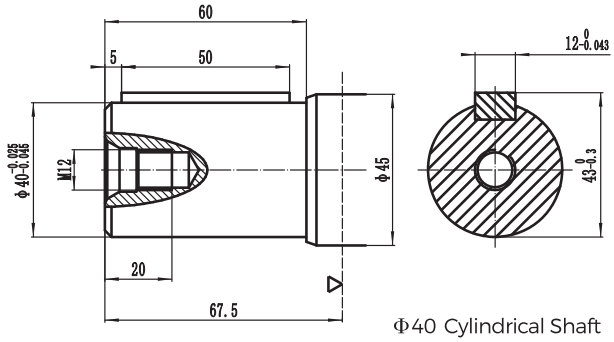

Φ40 Cylindrical Shaft
Flat Key 12x8x50

Motor Mounting Surface

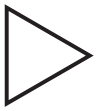

Connection Dimensions for BM4 Shaft Extension

H1

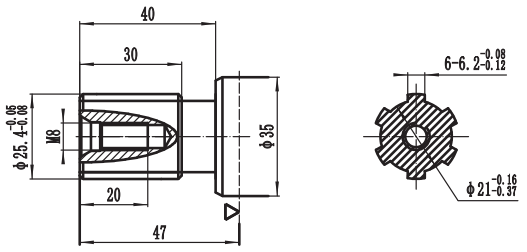

6-25.4X21x6.2
Φ25.4 Rectangular Spline Shaft

H4

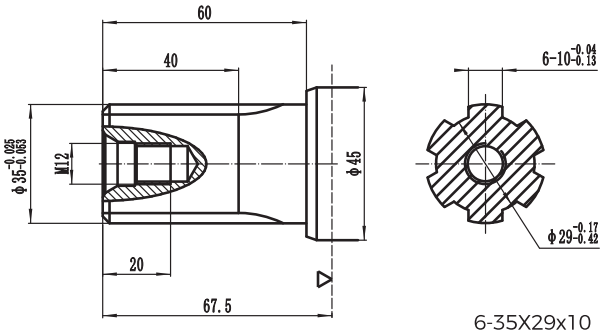

6-35X29x10
Φ35 Rectangular Spline Shaft

H2

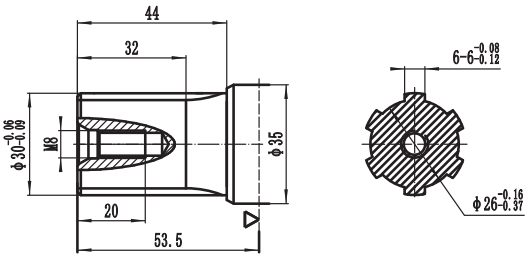

6-30X26x6
Φ30 Rectangular Spline Shaft

H5

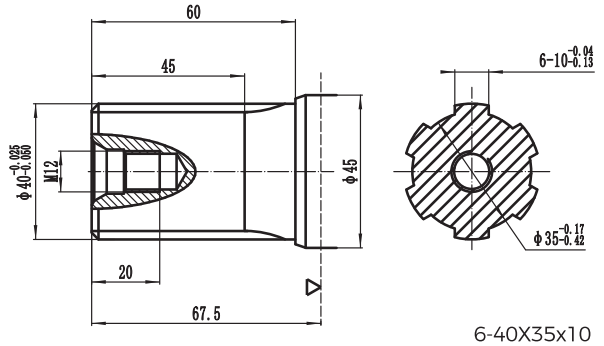

6-40X35x10
Φ40 Rectangular Spline Shaft

H3

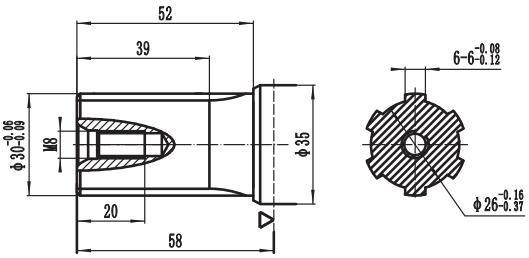

6-30X26x6
Φ30 Rectangular Spline Shaft

H6

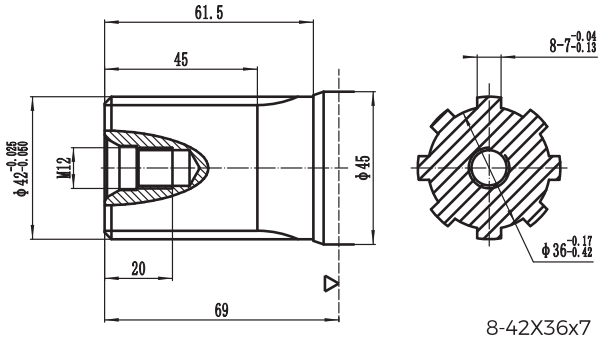

8-42X36x7
Φ42 Rectangular Spline Shaft

Motor Mounting Surface

Connection Dimensions for BM4 Shaft Extension

J7

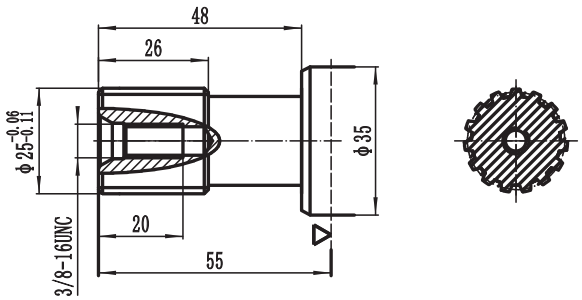

Φ25 Involute Spline
15-DP16/32

C1

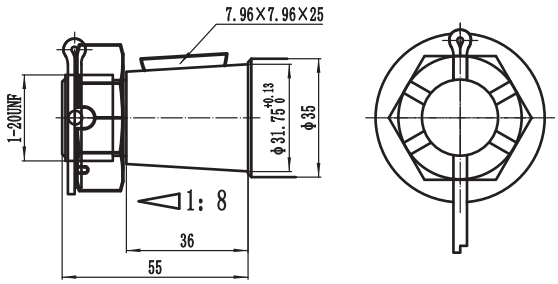

Φ31.75 Tapered Shaft
Taper 1:8

J1

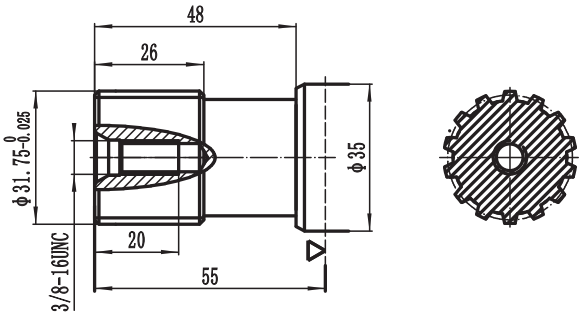

Φ31.75 Involute Spline
14-DP12/24

Motor Mounting Surface

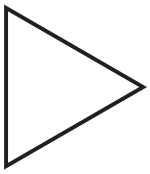

Output Shaft Rotation Direction: Standard

When facing the motor shaft extension direction, the shaft rotates:

When oil port A is at high pressure, the output shaft rotates clockwise.

When oil port B is at high pressure, the output shaft rotates counterclockwise.

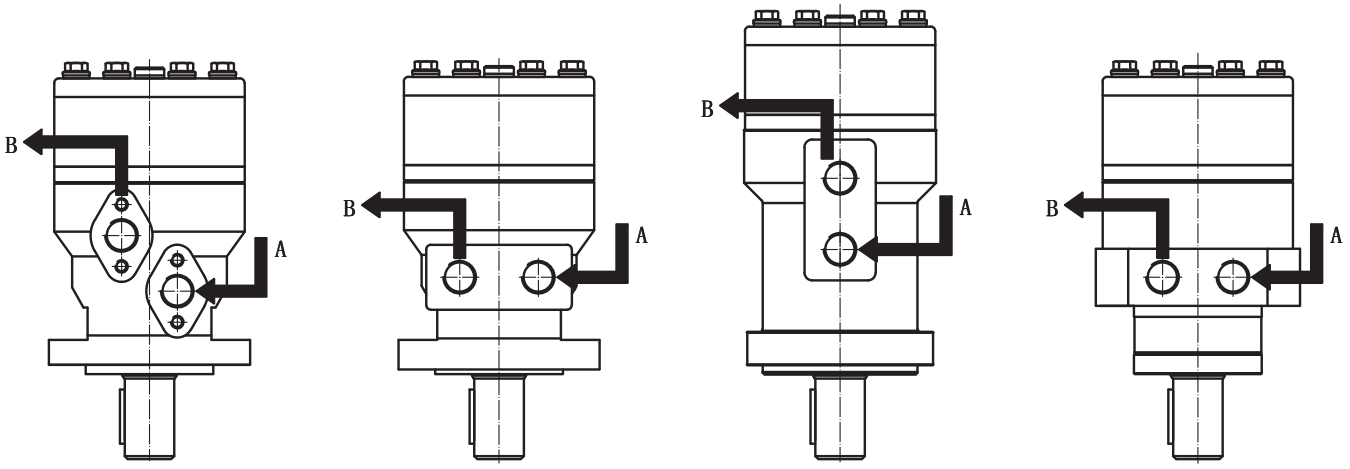

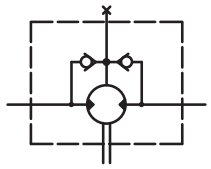

Motor Principle Diagram

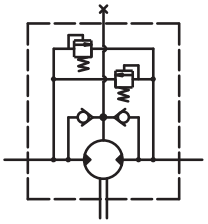

Rotary Motor Principle Diagram

Fr = Radial Force (daN)

L = Distance (mm)

n = Speed (rpm)

$$F_r = \frac{1100}{n} * \frac{25000}{103.5+L} \text{ (daN)}$$

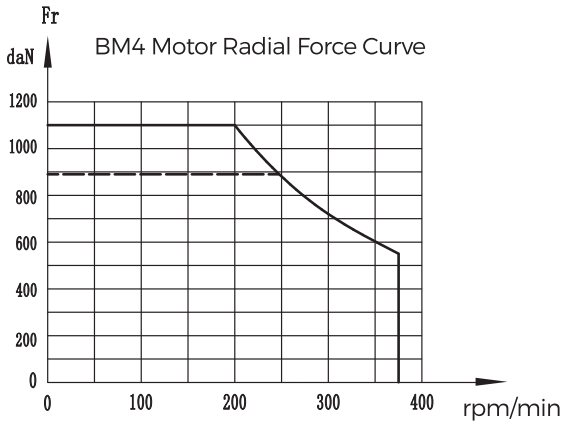

P Axial=300 dan

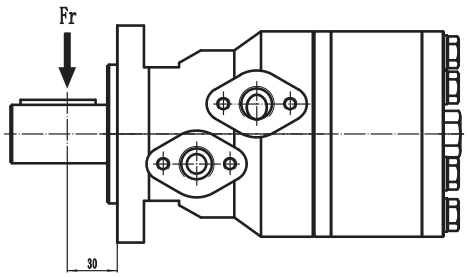

The curve shows the allowable radial load when L=30mm (1.18in).

Ordering Information for Cycloidal Hydraulic Motor of BM4 Series

Ordering Information:

1		2		3		4		5		6		7
BM4	—		—		—		—		—		—	

1	Product Series	BM4					
2	Displacement (ml/r)	245	310	390	490	625	800

3	
Code	Installation Flange, Mount Stopper
F1	2-Ø13.5 2-hole diamond flange with S-type oil port, Installation Stopper Ø82.5×6
F2	4-Ø13.5 4-hole diamond flange with S-type oil port, Installation Stopper Ø82.5×6
F3	6-Ø13.5 6-hole diamond flange with S-type oil port, Installation Stopper Ø82.5×6
F4	2-Ø13.5 2-hole diamond flange with horizontal and vertical oil port, Installation Stopper Ø82.5×6
F5	4-Ø13.5 4-hole diamond flange with horizontal and vertical oil port, Installation Stopper Ø82.5×6
F6	6-Ø13.5 6-hole diamond flange with horizontal and vertical oil port, Installation Stopper Ø82.5×6
F7	4-Ø13 4-hole large square flange with vertical oil port, Installation Stopper Ø125×6
F8	4-Ø13 4-hole small square flange with vertical oil port, Installation Stopper Ø100×6
F9	4-Ø13.5 Wheel motor, Installation Stopper Ø82.5×7
F10	4-Ø12.5 Rotary motor, Installation Stopper Ø80
F11	6-Ø12.5 Rotary motor, Installation Stopper Ø80
F12	4-M12 Rotary motor, Installation Stopper Ø80
F13	8-Ø13.5 Rotary motor, Installation Stopper Ø80
F14	4-M12 Rotary motor, Installation Stopper Ø80, rotating 90 degrees

4	
Code	Output Shaft
P1	Ø25 flat key shaft, flat key 8×7×32, shaft length 39
P2	Ø31.75 flat key shaft, flat key 7.96×7.96×32, shaft length 48
P3	Ø32 flat key shaft, flat key 10×8×45, shaft length 52
P4	Ø32 flat key shaft, flat key 10×8×35, shaft length 44
P5	Ø35 flat key shaft, flat key 10×8×45
P6	Ø40 flat key shaft, flat key 12×8×50, shaft length 60
H1	Ø25.4 rectangular spline shaft, 6-25.4×21×6.2, shaft length 40
H2	Ø30 rectangular spline shaft, 6-30×26×6, shaft length 44
H3	Ø30 rectangular spline shaft, 6-30×26×6, shaft length 52
H4	Ø35 rectangular spline shaft, 6-35×29×10, shaft length 60
H5	Ø40 rectangular spline shaft, 6-40×35×10, shaft length 60
H6	Ø42 rectangular spline shaft, 8-42×36×7, shaft length 61.5
J1	Ø25 involute spline shaft DP16/32, 15 teeth, shaft length 48
J2	Ø31.75 involute spline shaft DP12/24, 14 teeth, shaft length 48
C1	Ø31.75 tapered shaft, taper 1:8, shaft length 36

5	
Code	Oil Port
A/B-1	M27x2
A/B-2	M22x1.5
A/B-3	G3/4
A/B-4	G1/2
A/B-5	G3/8
A/B-6	7/8-14UNF O-ring

6	
Code	External Drain Port
T0	None
T1	G1/4
T2	7/16-20UNF O-ring
T3	M14X1.5

7	
Code	Rotation
None	Standard
R	Reverse

Hydraulics Orbital Motor of BMS Series

- End face flow distribution structure, high flow distribution accuracy.
- Advanced rotor and stator parameter design, low starting pressure, high efficiency, and good maintainability.
- Uses tapered roller bearing structure, strong capacity to withstand axial and radial loads, can directly drive working mechanisms, and has a wide range of applications.
- Higher working pressure and large output torque.
- Various flange, output shaft, oil port, and other installation configurations available.

BMS Technical Parameters

Displacement (ml/r)		80	100	125	160	200	245	305	400	500
Flow (L/min)	Maximum Continuous	75	75	75	75	75	75	75	75	75
	Intermittent	85	95	95	115	115	115	115	130	130
Speed (rpm)	Maximum Continuous	850	675	552	430	345	287	231	178	142
	Intermittent	956	855	700	660	529	423	347	308	246
Pressure (MPa)	Maximum Continuous	17.5	17.5	17.5	17.5	17.5	17.5	15	15	12
	Intermittent	28	28	28	25	25	25	21	17	15
Torque (N.m)	Maximum Continuous	178	223	278	356	445	557	580	715	720
	Intermittent	285	356	445	509	636	755	763	840	860

- The maximum continuous value refers to the maximum value at which the motor of this displacement can operate continuously.
- The intermittent value refers to the maximum value at which the motor of this displacement can operate for 6 seconds within 1 minute.
- The motor should not be used simultaneously at maximum pressure and maximum speed.
- Recommended oil: Anti-wear hydraulic oil, with a solid contamination level of ISO 18/15 for the working fluid.
- The maximum working oil temperature is 80°C.
- The motor can be used in series or parallel, and when used in series or parallel, the back pressure should not exceed 5 MPa. If exceeded, it is recommended to connect an External Drain Port pipe, which should preferably be directly connected to the oil tank.
- The motor should undergo a break-in period before operating at full load, recommended to run at less than 30% of the maximum working pressure for 1 hour.

Performance Parameters Table for BMS Series

BMS-80 Pressure (MPa)

Flow (L/min)	3.5	7	10	14	17	21	24	28
4	35 46	75 42	103 38	145 35	176 30	208 23	220 14	245 20
8	95 97	75 90	105 86	152 83	180 78	216 69	236 60	257 49
16	95 195	75 187	105 182	150 178	186 170	217 126	249 148	263 132
24	35 284	75 280	105 270	152 263	188 258	222 245	256 232	289 210
32	35 388	75 380	103 371	155 360	190 359	230 345	265 328	
45	30 538	75 535	101 530	149 518	186 510	229 482	262 470	
60	30 720	70 716	97 710	147 679	183 670	229 635		
75	25 899	65 687	95 860	146 856	179 842	221 801		
85	22 956	60 948	90 926	140 905				

BMS-100 Pressure (MPa)

Flow (L/min)	3.5	7	10	14	17	21	24	28
4	45 33	89 32	130 30	175 24	208 16	246 6		
8	46 75	90 72	135 68	180 55	215 53	251 38	278 30	
16	46 152	93 150	140 146	185 140	220 128	269 112	295 99	318 82
24	46 230	93 225	140 218	188 212	231 201	270 176	305 172	356 150
32	42 315	93 310	142 300	186 290	233 275	278 240	310 238	372 225
45	40 440	90 435	141 426	190 410	228 400	285 368	340 355	389 340
60	35 590	90 582	138 570	185 560	230 538	290 510	330 490	
75	35 725	85 716	136 702	178 678	228 660	280 641	315 622	
85	32 820	80 815	730 805	176 792	225 778	275 759		
95	24 920	75 918	122 901	169 887				

BMS-125 Pressure (MPa)

Flow (L/min)	3.5	7	10	14	17	21	24	28
4	55 29	115 25	172 21	221 17	280 14	325 10	360 4	
8	57 61	115 58	172 53	221 46	285 42	326 40	362 31	412 45
16	56 124	116 120	174 116	235 110	295 106	345 99	379 93	449 83
24	58 185	118 183	180 176	238 166	302 154	352 149	402 140	486 126
32	55 246	120 240	180 235	240 230	312 222	361 218	408 210	508 200
45	50 356	115 340	175 335	236 330	310 321	360 311	406 298	502 286
60	45 460	113 455	173 450	240 448	300 445	360 440	420 438	470 436
75	42 560	110 558	170 555	230 552	290 550	345 548	410 545	
85		105 640	160 635	230 630	300 628	355 625		
95		90 727	155 725	220 723	285 720			

BMS-160 Pressure (MPa)

Flow (L/min)	3.5	7	10	14	17	21	24
4	65 23	131 20	191 19	260 13	318 9	384 1	428 2
8	70 47	135 45	196 42	265 36	335 36	404 34	460 28
16	70 98	140 95	208 91	286 85	360 83	440 78	502 50
24	74 145	145 142	216 139	293 128	372 125	450 116	521 107
32	74 198	150 196	220 191	300 180	373 182	459 175	
45	70 282	150 279	221 276	305 265	380 254	458 240	
60	65 370	145 368	210 365	300 362	375 360	455 355	
75	60 459	135 456	205 453	300 455			
85		130 518	200 516				
95		128 578	200 575				
115		120 680					

BMS-200 Pressure (MPa)

Flow (L/min)	3.5	7	10	14	17	21	24
4	79 16	160 14	198 12	305 7	370 5	440 2	
8	86 37	165 35	245 34	325 27	420 24	522 20	570 13
16	90 78	175 76	256 75	345 68	438 66	523 60	596 53
24	91 116	180 114	268 113	360 105	448 103	542 98	610 90
32	91 160	185 156	270 154	371 150	460 146	550 136	620 130
45	91 226	186 222	280 219	376 215	466 209	550 202	
60	80 304	186 300	271 293	375 286	465 280		
75	75 382	176 376	268 370	370 361	460 350		
85	68 425	168 420	260 412	360 408			
95	60 482	160 476	256 470	355 459			
115	44 578	145 570	235 564				

Torque(N.M): 620
Speed (RPM): 130

Continuous

Intermittent

Performance Parameters Table for BMS Series

BMS-245 Pressure (MPa)

Flow (L/min)	3.5	7	10	14	17	21	24
4	105 13	210 11	312 10	410 6	524 4	630 3	
8	109 29	215 27	320 25	425 21	545 19	650 15	740 12
16	115 63	225 57	336 57	450 52	565 51	676 49	765 46
24	115 94	230 90	342 87	465 81	580 77	690 72	780 66
32	115 129	235 125	356 121	475 115	600 112	706 105	
45	110 183	235 180	356 176	480 170	600 165		
60	95 240	230 236	350 234	470 230	580 220		
75	90 303	215 300	336 296	465 290			
85	80 340	210 336	325 330	455 320			
95	75 385	200 378	320 375				
115	60 463	185 458					

BMS-305 Pressure (MPa)

Flow (L/min)	3.5	7	10	14	17	21
4	135 12	260 10	386 9	500 6	610 6	
8	135 25	270 23	390 21	520 19	640 15	768 11
16	140 52	280 50	410 48	545 44	675 40	815 34
24	145 77	290 75	420 72	560 66	700 60	732 56
32	145 104	295 120	428 100	575 91	710 85	
45	140 147	295 144	425 142	580 133	720 124	
60	125 195	281 190	423 185	570 176		
75	110 243	265 236	408 232	560 220		
85	104 275	258 271	382 265			
95	95 307	250 300	359 296			
115	75 366	228 361				

BMS-400 Pressure (MPa)

Flow (L/min)	3.5	7	10	14	17
4	175 9	350 8	496 7	665 6	820 5
8	180 19	360 18	510 17	695 14	830 11
16	190 39	375 37	542 36	730 34	866 29
24	190 58	385 56	550 54	750 50	880 46
32	190 80	390 78	560 74	765 70	
45	190 113	390 112	560 108	755 102	
60	180 150	380 148	542 144		
75	165 188	370 186	532 180		
85	154 211	358 210	522 208		
95	140 283	340 236			
115	120 288				

Torque(N.M): 880
Speed (RPM): 46

BMS-500 Pressure (MPa)

Flow (L/min)	3.5	7	10	14	15
15	218 30	440 29	660 28	895 27	995 25
30	225 61	450 60	675 58	910 56	1002 53
40	228 82	460 80	680 77	925 75	1017 68
50	225 103	456 100	682 95	920 92	1008 85
60	220 123	450 120	675 110	910 112	998 105
75	212 155	445 153	665 147	900 140	980 132
90	195 186	420 185	645 175	875 170	960 160

Continuous

Intermittent

Installation Dimensions for BMS Series

F1

2-hole
diamond flange

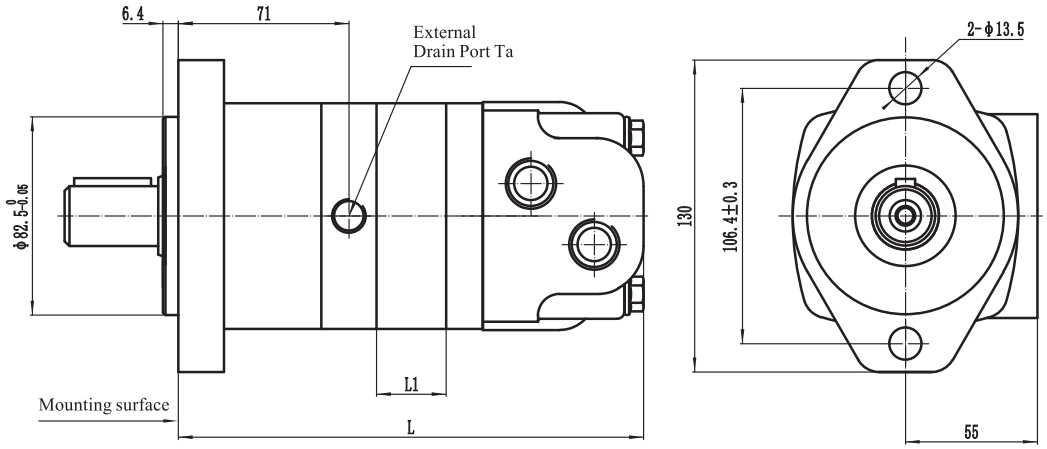

F2

4-hole
diamond flange

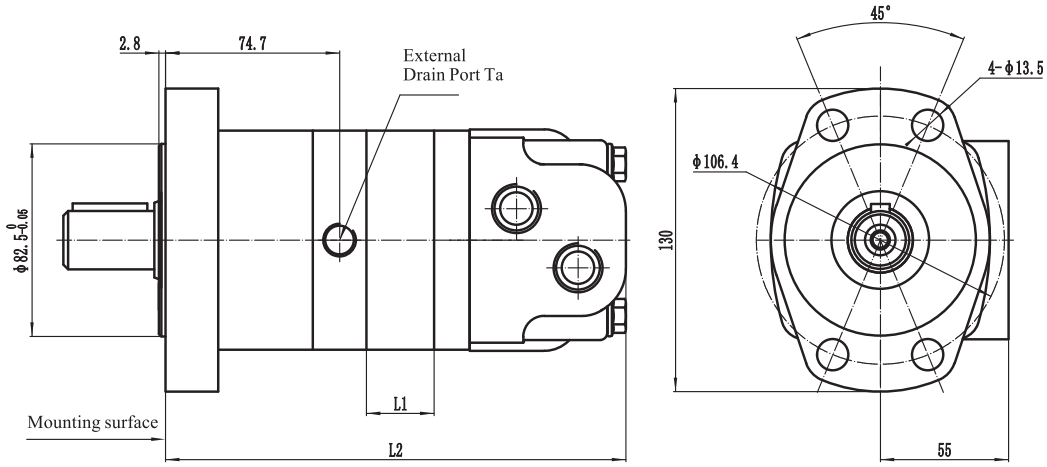

F3

6-hole
diamond flange

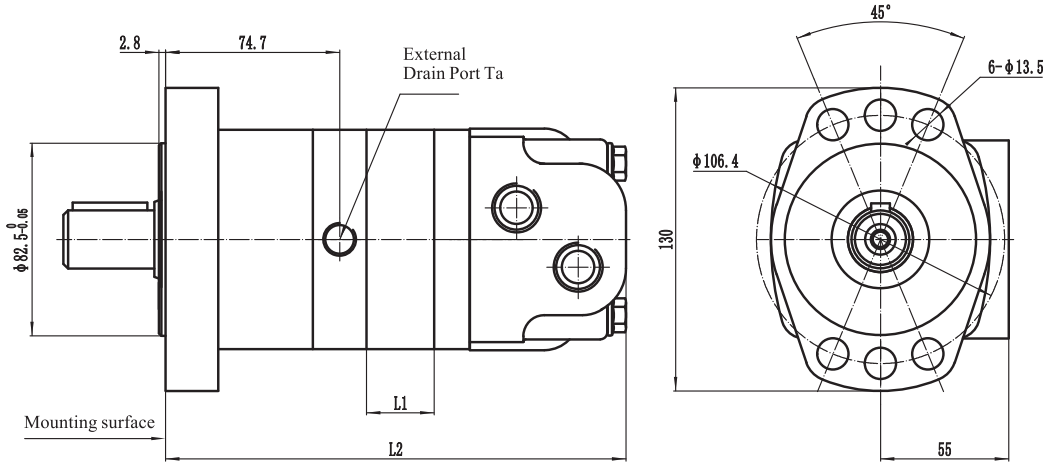

Installation Dimensions for BMS Series

F4

4-hole small square flange

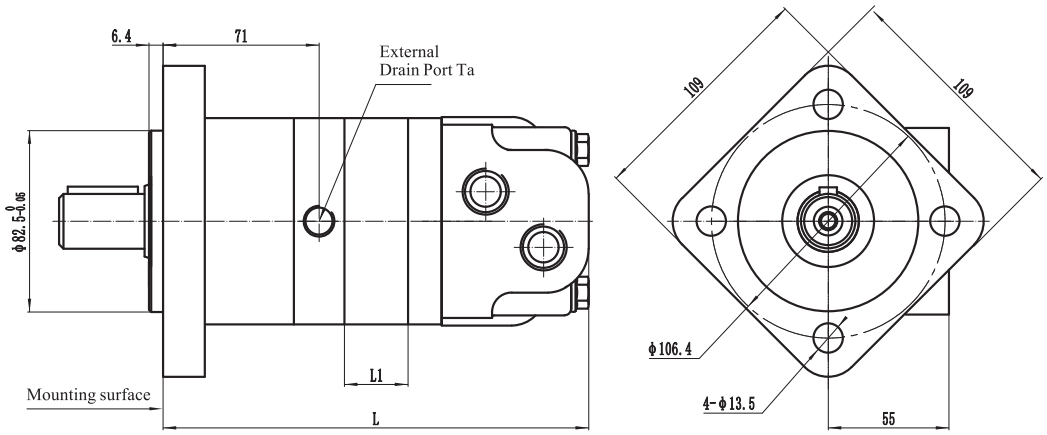

F5

4-hole large square flange

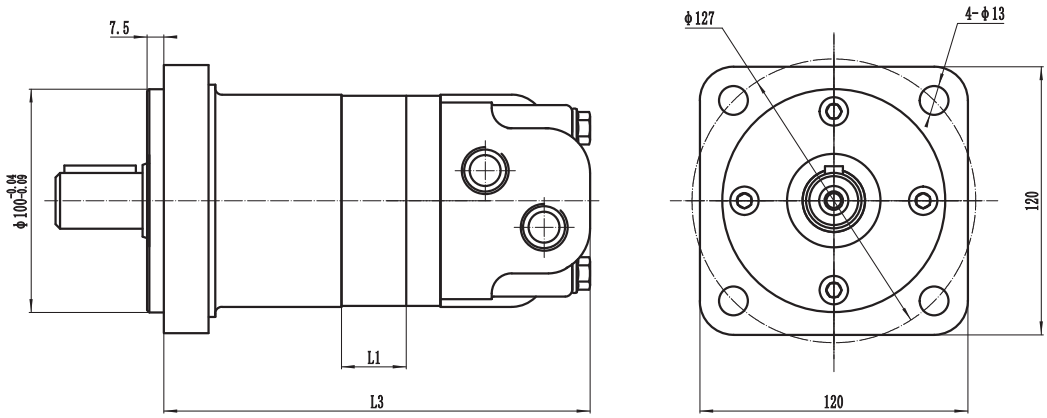

F6

Wheel motor

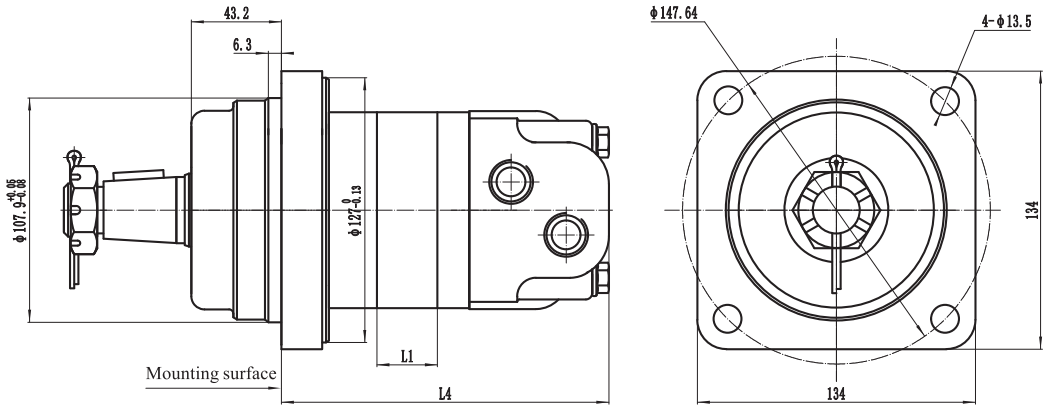

Installation Dimensions for BMS Series

F7 Wheel motor

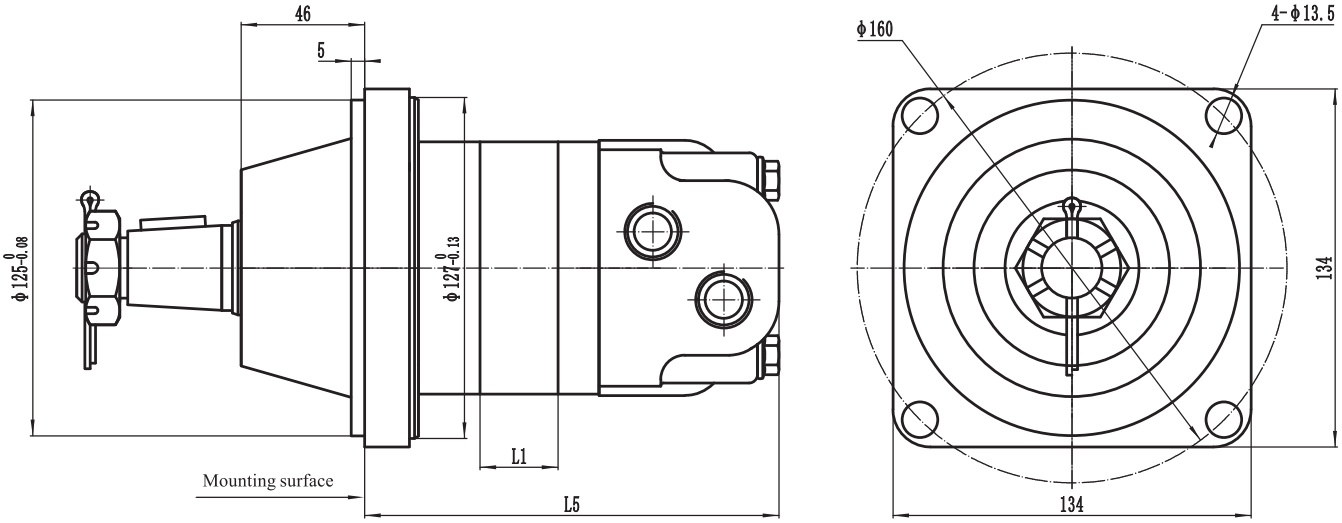

Model	BMS-80	BMS-100	BMS-125	BMS-160	BMS-200	BMS-245	BMS-305	BMS-400	BMS-500
L1	14.5	17.8	23	29	37	46	56	72	90
L	180	183	188	194	202	211	221	237	255
L2	184	187	192	198	206	215	225	241	259
L3	177	180	185	191	199	208	218	234	252
L4	143	146	151	157	165	174	184	200	218
L5	140	143	148	154	162	171	181	197	215

BMS Oil Port Connection Dimensions

Y1

Standard oil port

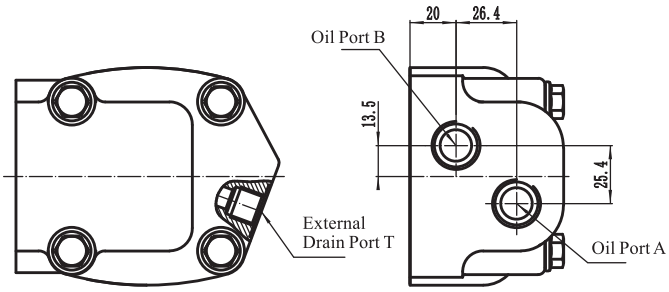

Y2

Plate connection

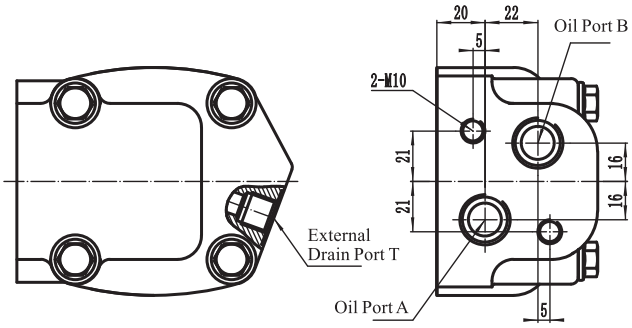

Y3

Plate connection

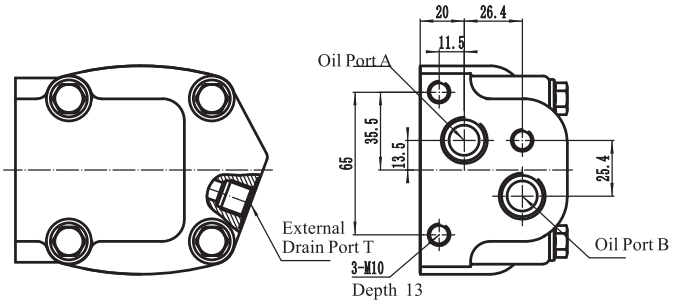

Y4

Plate connection

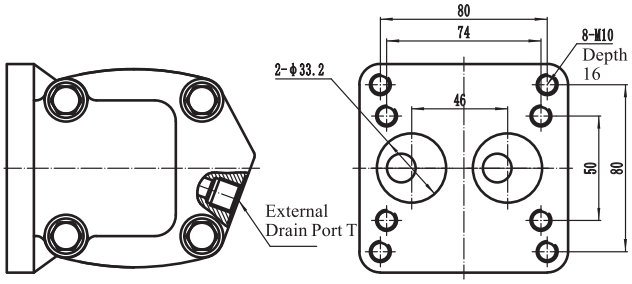

A/B Common Threads		Common Threads for External Drain Port T		Common Threads for External Drain Port Ta	
A/B-1	G1/2	T1	G1/4	Ta1	G1/4
A/B-2	7/8-14UNF 0-ring	T2	7/16-20UNF 0-ring	Ta2	7/16-20UNF 0-ring
A/B-3	M18x1.5	T3	M14x1.5	Ta3	M14x1.5
A/B-4	M22x1.5				

Connection Dimensions for BMS Shaft Extension

P1

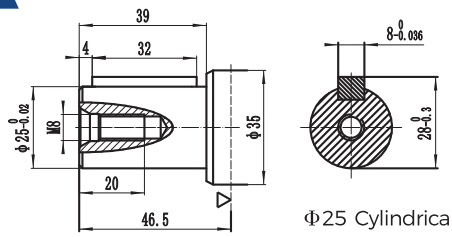

Φ25 Cylindrical Shaft
Flat Key 8x7x32

P5

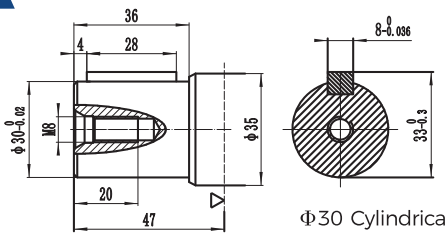

Φ30 Cylindrical Shaft
Flat Key 8x7x28

P2

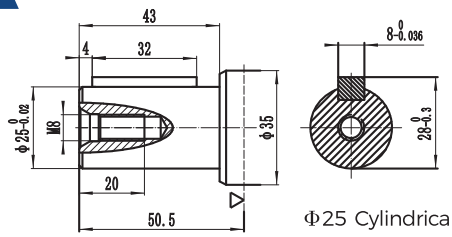

Φ25 Cylindrical Shaft
Flat Key 8x7x32

P6

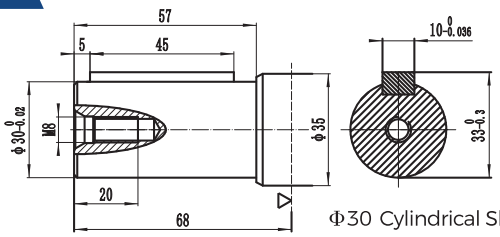

Φ30 Cylindrical Shaft
Flat Key 10x8x45

P3

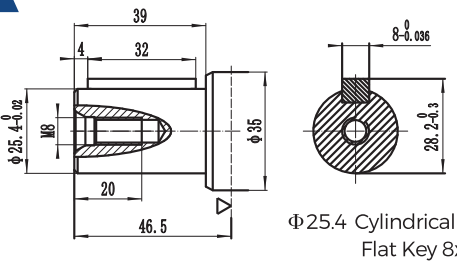

Φ25.4 Cylindrical Shaft
Flat Key 8x7x32

P7

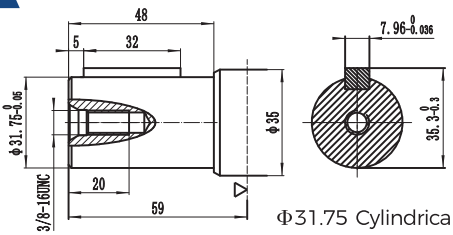

Φ31.75 Cylindrical Shaft
Flat Key 7.96x7. 96x32

P4

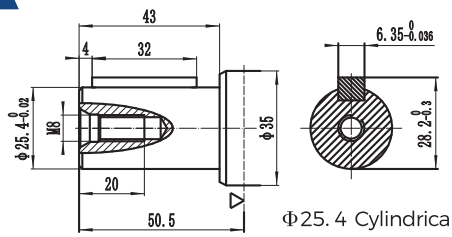

Φ25. 4 Cylindrical Shaft
Flat Key 6.35x6.35x32

P8

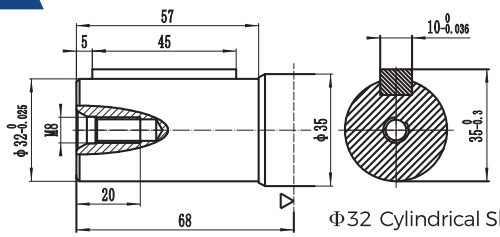

Φ32 Cylindrical Shaft
Flat Key 10x8x45

P9

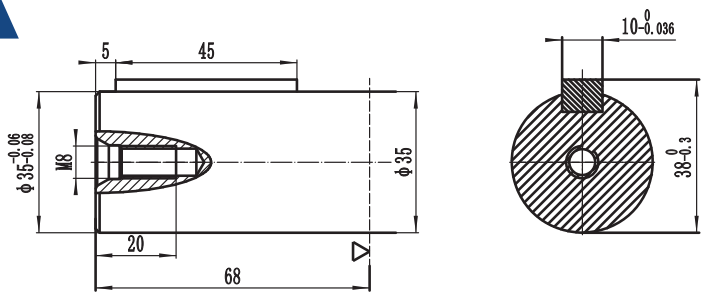

Motor Mounting Surface

Φ35 Cylindrical Shaft
Flat Key 10x8x45

Connection Dimensions for BMS Shaft Extension

H1

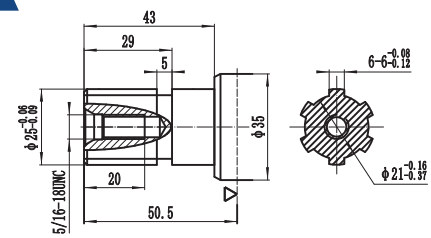

6-25X21x6
Φ25 Rectangular Spline Shaft

H4

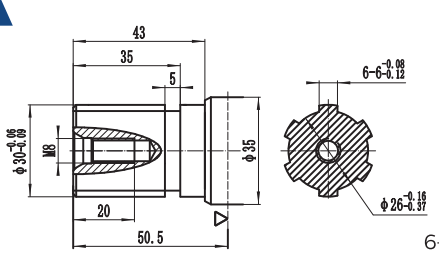

6-30X26x6
Φ30 Rectangular Spline Shaft

H2

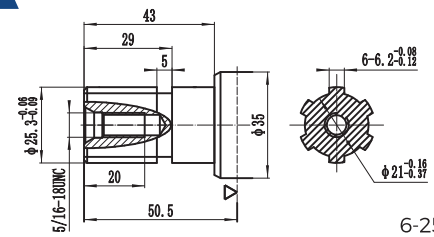

6-25.3X21x6.2
Φ25.3 Rectangular Spline Shaft

H5

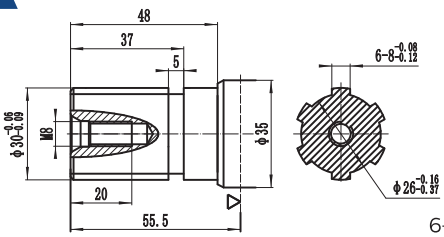

6-30X26x8
Φ30 Rectangular Spline Shaft

H3

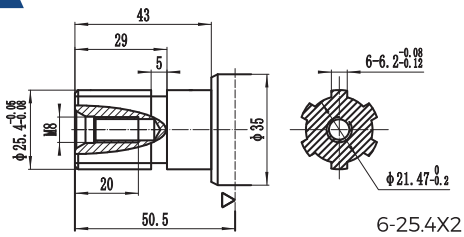

6-25.4X21.47x6.2
Φ25.4 Rectangular Spline Shaft

H6

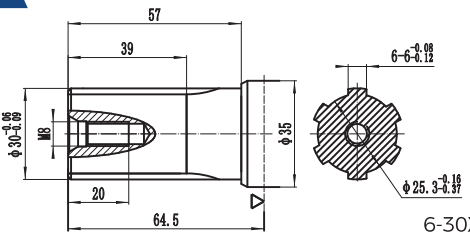

6-30X25.3x6
Φ30 Rectangular Spline Shaft

J1

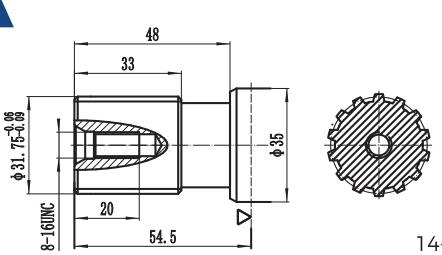

14-DP12/24
Φ31.75 Involute Spline

J2

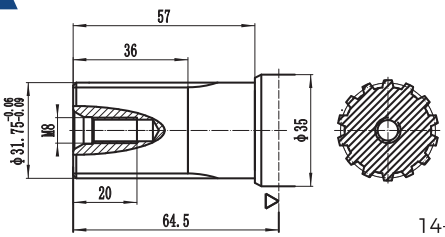

14-DP12/24
Φ31.75 Involute Spline

C1

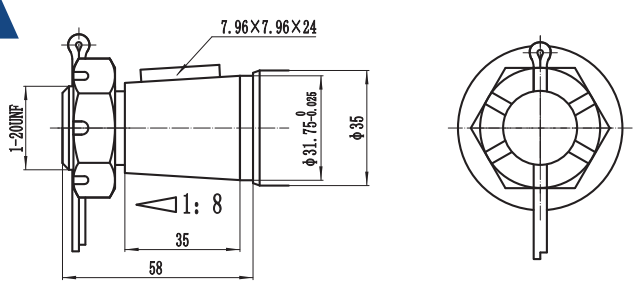

Motor Mounting Surface

Taper 1:8
Φ31.75 Tapered Shaft

Output Shaft Rotation Direction: Standard

When facing the motor shaft extension direction, the shaft rotates:

When oil port A is at high pressure, the output shaft rotates clockwise.

When oil port B is at high pressure, the output shaft rotates counterclockwise.

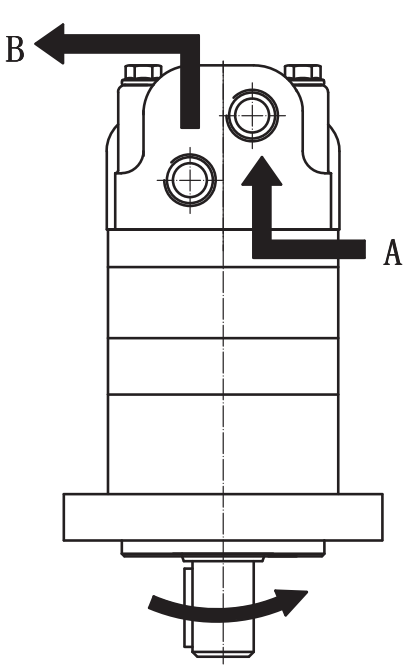

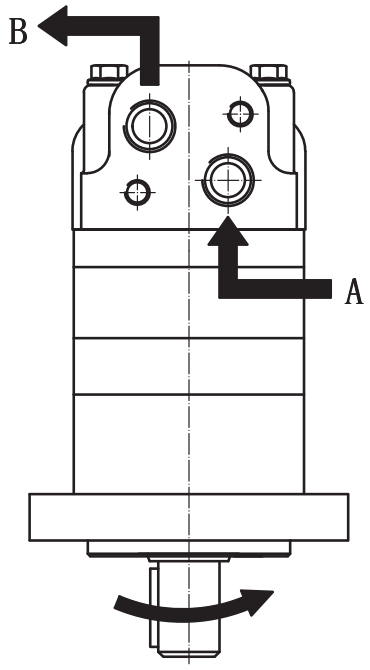

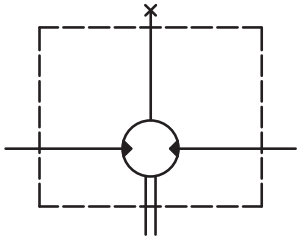

Motor Principle Diagram

BMS Shaft and Radial Force Curve

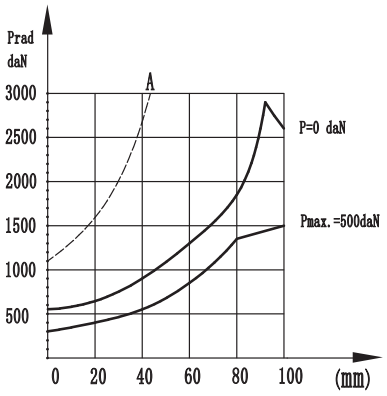

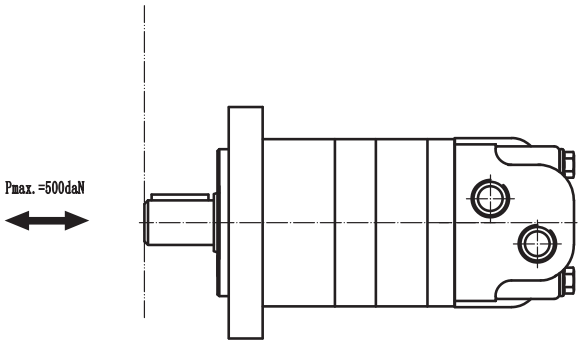

Ordering Information for Cycloidal Hydraulic Motor of BMS Series

Ordering Information:

1	2	3	4	5	6	7	8	9
BMS								

1	Product Series	BMS								
2	Displacement (ml/r)	80	100	125	160	200	250	305	400	500

3	
Code	Installation Flange, Mount Stopper
F1	2-Ø13.5 2-hole diamond flange, Installation Stopper Ø82.5×6.4
F2	4-Ø13.5 4-hole diamond flange, Installation Stopper Ø82.5×2.8
F3	6-Ø13.5 6-hole diamond flange, Installation Stopper Ø82.5×2.8
F4	4-Ø13.5 4-hole small square flange, Installation Stopper Ø82.5×6.4
F5	4-Ø13 4-hole large square flange, Installation Stopper Ø100×7.5
F6	4-Ø13.5 Wheel motor, Installation Stopper Ø107.9×6.3
F7	4-Ø13.5 Wheel motor, Installation Stopper Ø125×5

4	
Code	Output Shaft
P1	Ø25 flat key shaft, flat key 8×7×32, shaft length 39
P2	Ø25 flat key shaft, flat key 8×7×32, shaft length 43
P3	Ø25.4 flat key shaft, flat key 8×7×32, shaft length 39
P4	Ø25.4 flat key shaft, flat key 6.35×6.35×32, shaft length 43
P5	Ø30 flat key shaft, flat key 8×7×28, shaft length 36
P6	Ø30 flat key shaft, flat key 10×8×45, shaft length 57
P7	Ø31.75 flat key shaft, flat key 7.96×7.96×32, shaft length 48
P8	Ø32 flat key shaft, flat key 10×8×45, shaft length 57
P9	Ø35 flat key shaft, flat key 10×8×45
H1	Ø25 rectangular Spline Shaft, 6-25×21×6, shaft length 43
H2	Ø25.3 rectangular Spline Shaft, 6-25.3×21×6.2, shaft length 43
H3	Ø25.4 rectangular Spline Shaft, 6-25.4×21×6.2, shaft length 43
H4	Ø30 rectangular Spline Shaft, 6-30×26×6, shaft length 43
H5	Ø30 rectangular Spline Shaft, 6-30×26×8, shaft length 48
H6	Ø30 rectangular Spline Shaft, 6-30×25.3×6, shaft length 57
J1	Ø31.75 involute spline shaft DP12/24, 14 teeth, shaft length 48
J2	Ø31.75 involute spline shaft DP12/24, 14 teeth, shaft length 57
C1	Ø31.75 Tapered Shaft, Taper 1:8, shaft length 35

5	
Code	Oil Port
A/B-1	G1/2
A/B-2	7/8-14UNF O-ring
A/B-3	M18x1.5
A/B-4	M22x1.5

6	
Code	External Drain Port
T0	None
T1	G1/4
T2	7/16-20UNF O-ring
T3	M14X1.5

7	
Code	Oil Port Types
Y1	Standard oil port
Y2	2-M10 Plate connection
Y3	3-M10 Plate connection
Y4	8-M10 Plate connection

8	
Code	External Drain Port Ta
Ta0	None
Ta1	G1/4
Ta2	7/16-20UNF O-ring
Ta3	M14X1.5

9	
Code	Rotation
None	Standard
R	Reverse

Hydraulics Orbital Motor of BMT Series

- End-face flow distribution structure, high flow distribution accuracy
- Advanced rotor and stator parameter design, low starting pressure, high efficiency, and good maintainability
- Uses tapered roller bearing structure, strong ability to withstand axial and radial loads, can directly drive working mechanisms, with a wide range of applications
- Higher working pressure, large output torque
- Various flange, output shaft, oil port, and other installation configurations available
- Integrated with functions such as overflow valves, balancing valves, etc.

BMT Technical Parameters

Displacement (ml/r)		195	245	310	390	490	625	800	985
Flow (L/min)	Maximum Continuous	150	150	150	150	150	150	150	150
	Intermittent	170	210	225	225	225	225	225	225
Speed (rpm)	Maximum Continuous	775	615	698	387	307	241	184	153
	Intermittent	866	834	485	570	454	355	278	230
Pressure (MPa)	Maximum Continuous	17	17	17	17	17	12	12	12
	Intermittent	27.5	27.5	27.5	27.5	24	14	14	14
Torque (N.m)	Maximum Continuous	475	615	775	965	1215	1125	1380	1570
	Intermittent	770	980	1225	1455	1685	1330	1650	1875

- The maximum continuous value refers to the maximum value at which the motor of this displacement can operate continuously.
- The intermittent value refers to the maximum value at which the motor of this displacement can operate for 6 seconds within 1 minute.
- The motor should not be used simultaneously at maximum pressure and maximum speed.
- Recommended oil: Anti-wear hydraulic oil, with a solid contamination level of ISO 18/15 for the working fluid.
- The maximum working oil temperature is 80°C.
- The motor can be used in series or parallel, and when used in series or parallel, the back pressure should not exceed 5 MPa. If exceeded, it is recommended to connect an External Drain Port pipe, which should preferably be directly connected to the oil tank.
- The motor should undergo a break-in period before operating at full load, recommended to run at less than 30% of the maximum working pressure for 1 hour.

Performance Parameters for Table BMT Series

Continuous

Intermittent

BMT-195 Pressure (MPa)

Flow (L/min)	3.5	7	10.5	14	17.5	20	24	27.5
8	76	168	262	345	438	465		
	38	35	34	31	27	16		
15	81	174	270	365	455	510	580	640
	75	74	71	65	60	45	32	16
30	85	175	275	370	465	540	615	700
	151	147	142	132	121	109	96	80
45	85	180	280	375	470	535	650	740
	227	223	218	210	200	185	165	146
60	80	178	282	380	475	565	660	750
	305	300	300	288	280	255	235	210
75	78	175	275	378	480	565	670	760
	380	376	370	362	350	328	300	270
90	75	172	270	375	475	565	660	765
	456	452	445	436	420	405	383	355
105	70	170	170	270	370	470	560	760
	534	530	523	510	496	470	435	400
120	67	166	265	365	465	560	660	755
	610	605	598	585	570	536	502	450
135	65	160	260	360	465	560	655	750
	687	680	672	650	638	595	550	485
150	60	155	258	356	450	550	650	
	765	755	740	725	700	640	580	
170	60	155	255	350	450	545	640	
	865	850	840	820	800	745	700	

BMT-245 Pressure (MPa)

Flow (L/min)	3.5	7	10.5	14	17.5	20	24	27.5
8	103	215	335	440	550	560		
	30	27	24	21	15	10		
15	105	220	340	455	570	640	745	850
	57	55	52	46	40	37	28	10
30	110	232	352	470	600	685	790	900
	116	113	110	105	96	80	64	48
45	110	235	355	475	610	705	840	940
	177	174	170	164	155	140	125	105
60	110	230	350	480	615	705	845	955
	240	237	233	224	212	198	180	165
75	105	230	355	485	620	710	850	960
	295	292	285	278	268	254	230	206
90	105	225	350	480	615	710	845	955
	360	352	342	338	322	305	288	265
105	100	220	340	475	610	705	840	950
	420	415	410	395	375	355	335	315
120	95	210	340	470	590	700	830	940
	480	470	465	455	445	420	385	365
135	85	205	325	460	580	690	820	
	540	535	525	515	505	480	445	
150	80	200	320	450	570	680	815	
	605	600	595	580	565	535	495	
170	65	190	315	440	560	675	750	
	685	680	665	650	635	600	565	
185		185	310	430	545	570		
		750	745	730	710	655		
205		175	300	415	536	525		
		830	820	800	775	735		

BMT-310 Pressure (MPa)

Flow (L/min)	3.5	7	10.5	14	17.5	20	24	27.5
8	135	280	410	540	650	750	880	
	23	22	20	16	13	10	8	
15	135	285	435	565	690	810	940	1010
	45	44	41	36	30	22	16	10
30	135	295	440	600	740	880	990	1100
	90	90	85	80	70	65	52	45
45	140	300	460	610	750	900	1035	1165
	140	135	130	125	120	118	95	85
60	140	300	460	615	775	920	1055	1200
	189	185	182	175	165	155	138	125
75	135	295	455	615	780	920	1065	1215
	237	235	230	225	215	200	180	160
90	130	290	450	615	780	920	1070	1220
	285	280	275	270	260	245	225	210
105	125	280	445	605	770	915	1070	1205
	335	330	325	315	300	290	270	250
120	120	280	440	600	765	910	1055	
	385	380	375	365	350	335	315	
135	115	275	435	585	760	900	1050	
	430	420	415	410	390	380	350	
150	110	270	420	570	755	880	1030	
	475	465	455	450	435	420	395	
190	100	245	375	520	685	820		
	595	580	575	560	550	530		
225		220	350	500	640	770		
		690	685	675	650	635		

Torque(N.M): 1205
Speed (RPM): 250

BMT-390 Pressure (MPa)

Flow (L/min)	3.5	7	10.5	14	17.5	20	24	27.5
8	180	370	555	730	885	1025	1195	
	18	17	16	14	12	9	4	
15	185	375	560	740	930	1070	1265	1380
	37	36	35	33	28	22	14	5
30	185	380	575	760	960	1135	1315	1455
	74	73	70	68	65	55	45	30
45	185	385	580	765	970	1145	1335	1530
	113	111	108	105	100	90	80	75
60	180	380	580	770	975	1155	1345	
	155	150	145	140	135	125	110	
75	180	380	580	775	980	1160	1355	
	190	190	185	180	175	160	150	
90	175	375	570	765	975	1155		
	230	225	225	220	210	200		
105	165	360	560	760	965	1150		
	267	265	260	255	245	230		
120	160	355	550	745	950	1140		
	305	305	298	290	275	265		
135	155	340	545	735	940	1120		
	345	335	330	320	310	295		
150	145	320	530	730	925			
	380	375	370	360	350			
190	130	300	515	730	915			
	485	765	470	455	445			
225		285	500	710	895			
		570	560	550	535			

Performance Parameters for Table BMT Series

BMT-490 Pressure (MPa)

Flow (L/min)	3.5	7	10.5	14	17.5	20	24	27.5
8	240 14	475 13	705 12	940 11	1165 8	1375 5		
15	235 29	480 29	720 28	960 27	1190 25	1400 21	1625 17	1880 12
30	235 59	485 58	735 57	975 55	1215 50	1445 45	1685 35	
45	235 90	485 89	735 87	975 85	1215 78	1450 70		
60	235 120	480 120	730 118	975 115	1220 108	1460 95		
75	225 150	470 149	725 145	970 140	1220 135			
90	220 182	465 180	720 178	965 175	1215 168			
105	205 212	460 210	710 206	960 201	1210 195			
120	195 245	450 240	700 235	950 225	1205 220			
135	175 273	435 275	680 265	935 255	1170 250			
150	155 305	420 300	665 290	920 285	1150 280			
190	130 385	360 380	580 375	865 365				
225		320 455	555 440	800 432				

Continuous

Intermittent

BMT-625 Pressure (MPa)

Flow (L/min)	3.5	7	10.5	14	17.5	20	22.5
8	265 12	540 11	805 10	1050 5			
15	280 23	585 22	865 21	1085 15	1425 13		
30	295 47	605 45	925 42	1270 38	1480 35	1780 30	
45	295 71	610 70	920 68	1330 65	1465 58	1770 50	1890 25
60	285 94	605 90	915 85	1330 83	1465 78		
75	275 119	595 116	915 112	1325 105			
90	260 145	585 140	905 135	1310 130			
105	255 167	575 165	895 160	1305 152			
120	235 191	560 186	880 182	1280 175			
135	220 215	540 212	855 207				
150	200 239	525 236	840 233				
190		465 300	795 290				
225		430 360	740 348				

BMT-800 Pressure (MPa)

Flow (L/min)	3.5	5	7	8.5	10.5	12	14	15.5	17.5
8	355 9	540 8	725 8	955 7	1080 6	1275 5	1360 4		
15	370 18	565 17	758 17	980 16	1130 15	1265 14	1420 12	1655 10	1880 9
30	385 35	590 34	795 33	1005 32	1200 31	1330 29	1580 28	1740 25	
45	385 55	590 54	800 53	1015 52	1200 52	1380 50	1550 48		
60	380 73	580 72	790 70	1015 69	1200 67	1345 65			
75	370 92	575 92	782 88	1000 87	1185 85	1365 82			
90	360 111	560 110	765 108	990 105	1170 102				
105	340 129	555 128	750 127	972 125	1155 120				
120	325 148	545 145	735 143	945 140	1130 135				
135	305 167	525 165	710 160	910 158					
150	270 185	500 183	680 180	880 176					
190	300 235	475 233	660 230	855 226					
225		423 280	612 276	830 272					

Torque(N.M): 1880
Speed (RPM): 9

BMT-985 Pressure (MPa)

Flow (L/min)	3.5	5	7	8.5	10.5	12	14
8	470 7	695 6	945 6	1170 5	1415 4	1560 3	1675 2
15	485 15	715 15	965 14	1200 14	1445 13	1580 13	1780 12
30	495 30	720 30	995 29	1235 28	1480 27	1640 25	1860 23
45	495 45	720 44	1000 44	1250 43	1490 42	1700 40	
60	490 60	715 60	990 58	1245 56	1500 55		
75	475 76	710 76	980 75	1230 73	1485 70		
90	460 91	705 91	960 90	1215 88	1465 85		
105	445 106	690 105	940 105	1195 103	1440 100		
120	420 122	665 121	920 119	1155 116			
135	390 137	635 136	890 135	1120 134			
150	360 151	605 150	860 148	1080 145			
190	320 192	575 190	820 188	1040 185			
225		515 230	800 225	1020 224			

Installation Dimensions for BMT Series

F1-F3

4-hole small square flange

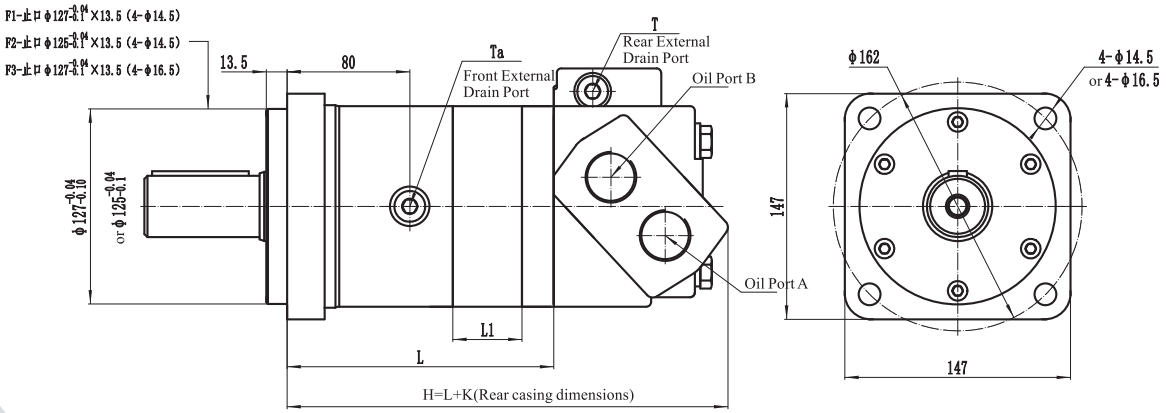

F4

4-hole small square flange

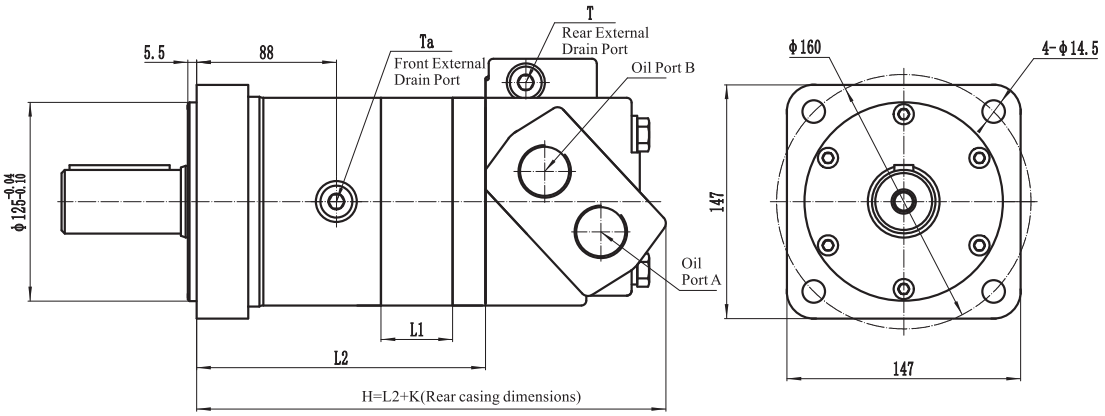

F5

4-hole small square flange

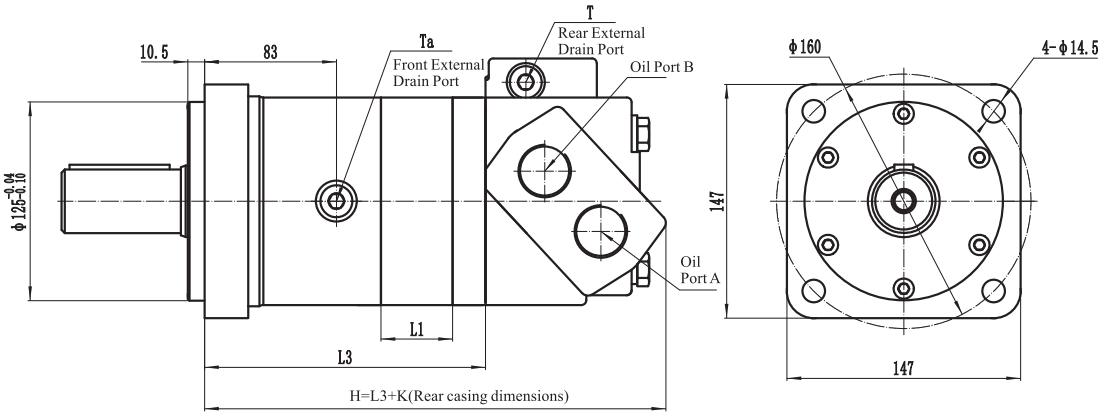

Installation Dimensions for BMT Series

F6

4-hole large square flange

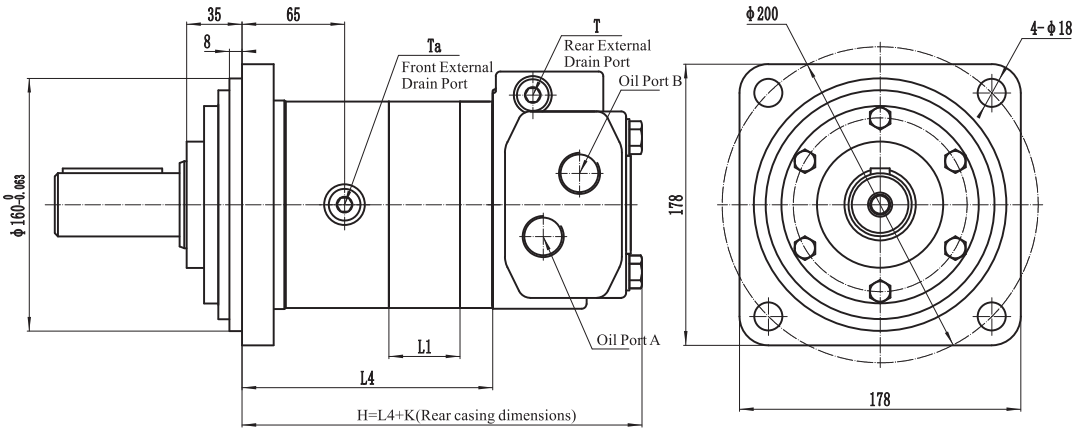

F7

4-wheel motor

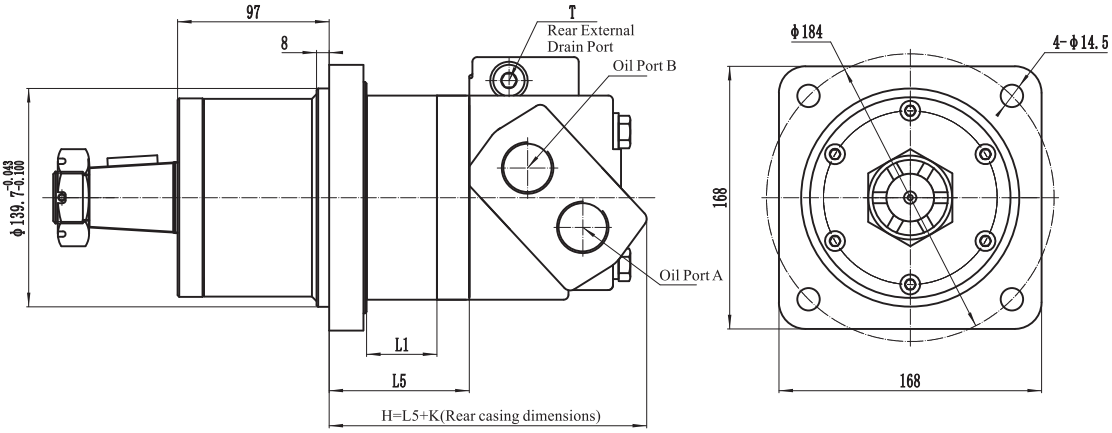

Model	BMT-195	BMT-245	BMT-310	BMT-390	BMT-490	BMT-625	BMT-800	BMT-985
L1	21.7	27.3	34.5	45	54.4	69	90	108.8
L	151	156	164	174	184	198	219	238
L2	159	164	172	182	192	206	227	246
L3	154	159	167	177	187	201	222	241
L4	136	141	149	159	169	183	204	223
L5	67	72	80	90	100	114	135	154

Connection Dimensions for BMT Oil Port

Y1

Standard oil port

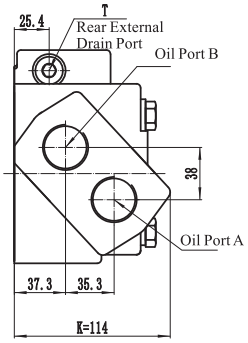

Y2

4M-12 Center distance 38x38

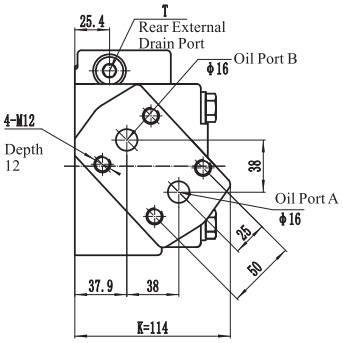

Y3

Center distance 40x23

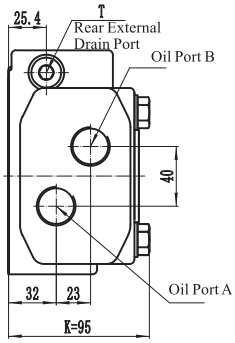

Y4

Center distance 50x24

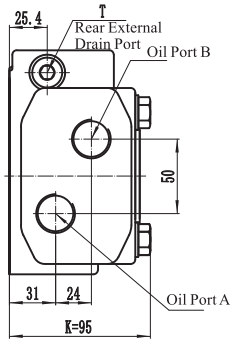

Y5

Center distance 44x20

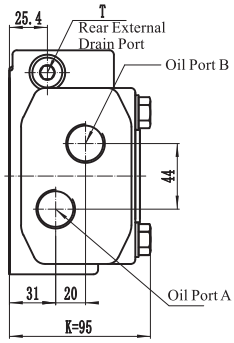

Y6

4M-10 Center distance 40x23

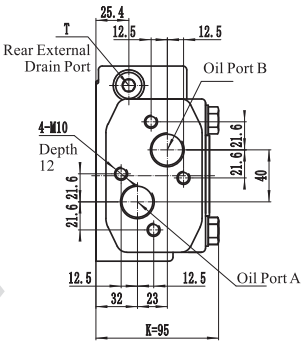

Y7

4M-12 Center distance 50x24

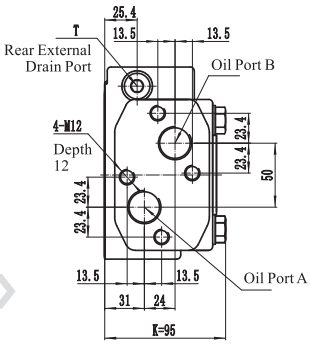

Y8

4M-10 Center distance 44x20

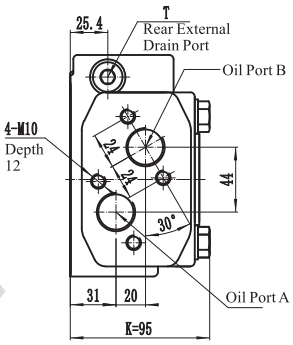

A/B Common Threads				Common Thread for Rear External Drain Port T		Common Thread for Front External Drain Port Ta	
A/B-1	M33x2	A/B-6	G3/4	T0	None	Ta0	None
A/B-2	M27x2	A/B-7	G1/2	T1	M14x1.5	Ta1	M14x1.5
A/B-3	M24x1.5	A/B-8	1 1/16-12UN O-ring	T2	G1/4	Ta2	G1/4
A/B-4	M22x1.5	A/B-9	1 5/16-12UN 0-ring	T3	7/16-20UNF O-ring	Ta3	7/16-20UNF O-ring
A/B-5	G1			T4	9/16-18UNF O-ring	Ta4	9/16-18UNF O-ring
						Ta5	M10X1

Connection Dimensions for BMT Shaft Extension

P1

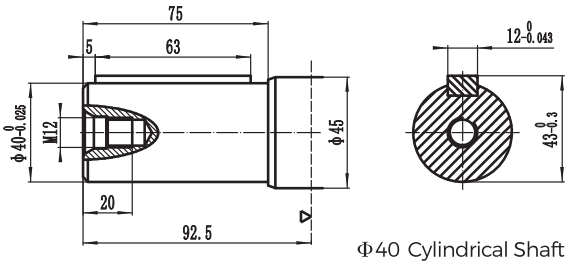

Φ40 Cylindrical Shaft
Flat Key 12x8x63

P5

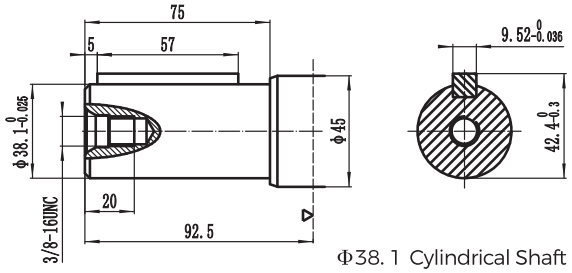

Φ38.1 Cylindrical Shaft
Flat Key 9.52x9.52x57

P2

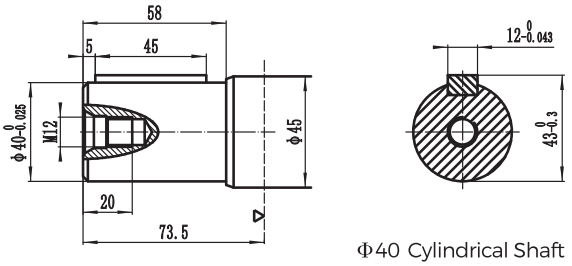

Φ40 Cylindrical Shaft
Flat Key 12x8x45

P6

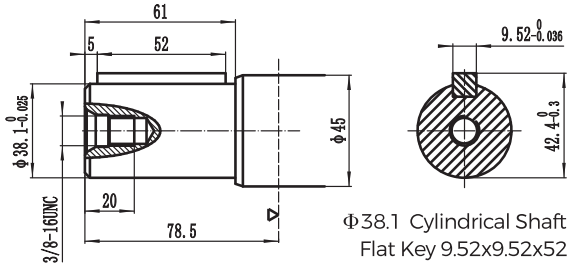

Φ38.1 Cylindrical Shaft
Flat Key 9.52x9.52x52

P3

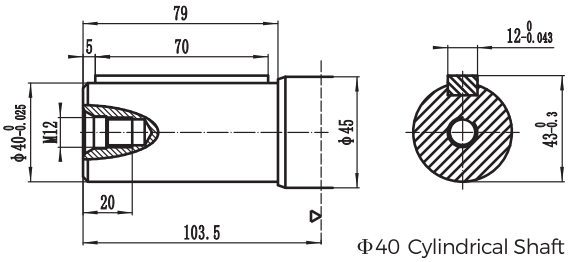

Φ40 Cylindrical Shaft
Flat Key 12x8x70

P7

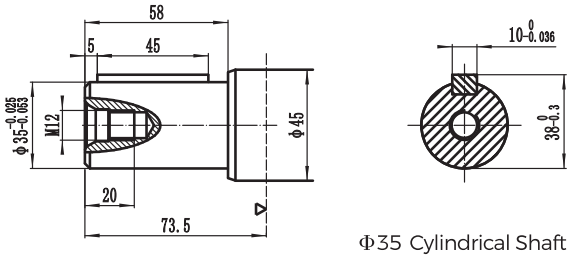

Φ35 Cylindrical Shaft
Flat Key 10x8x45

P4

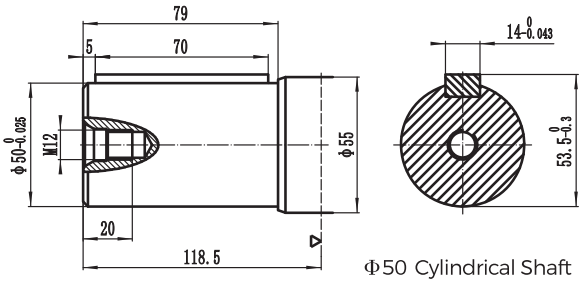

Φ50 Cylindrical Shaft
Flat Key 14x9x70

P8

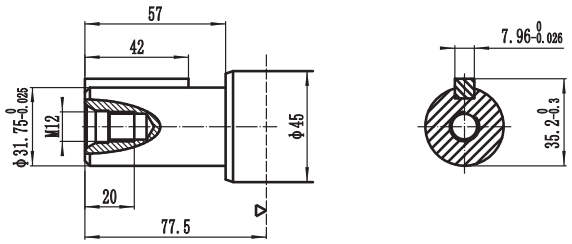

Φ31.75 Cylindrical Shaft
Flat Key 7.96x7.96x42

Motor Mounting Surface ▷

Connection Dimensions for BMT Shaft Extension

H1

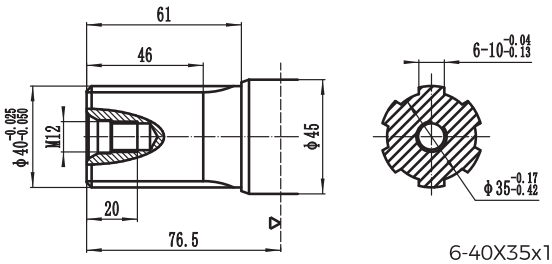

6-40X35x10
Φ40 Rectangular Spline Shaft

H5

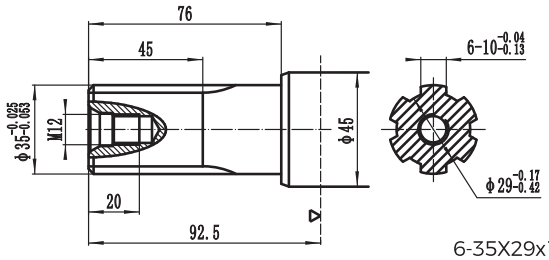

6-35X29x10
Φ35 Rectangular Spline Shaft

H2

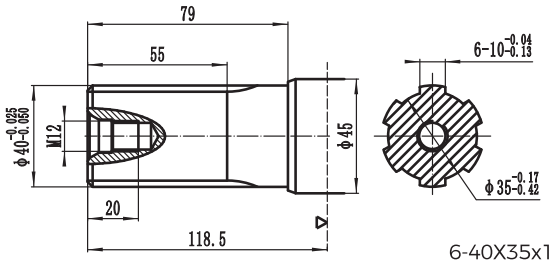

6-40X35x10
Φ40 Rectangular Spline Shaft

C1

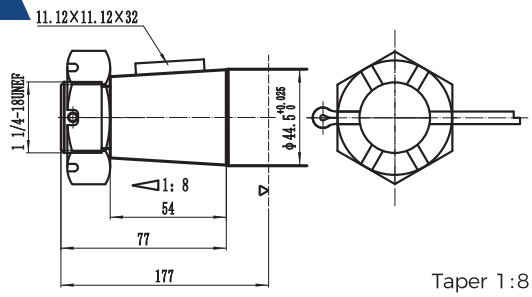

Taper 1:8
Φ44.5 Tapered Shaft

H3

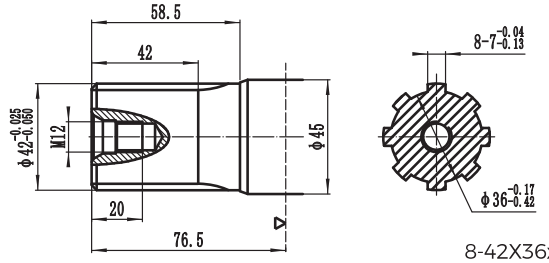

8-42X36x7
Φ42 Rectangular Spline Shaft

C2

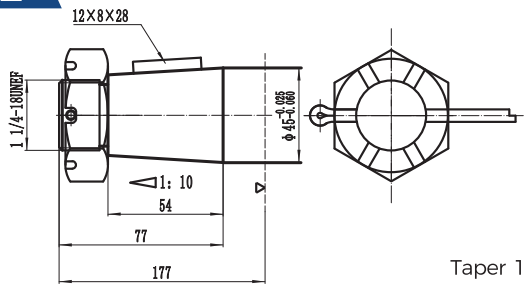

Taper 1:10
Φ45 Tapered Shaft

H4

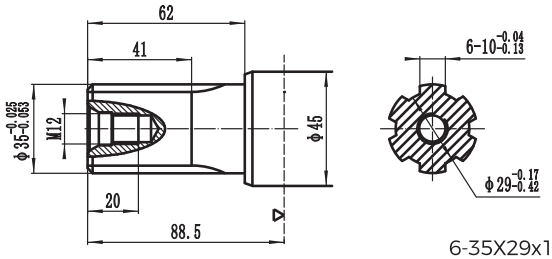

6-35X29x10
Φ35 Rectangular Spline Shaft

Motor Mounting Surface

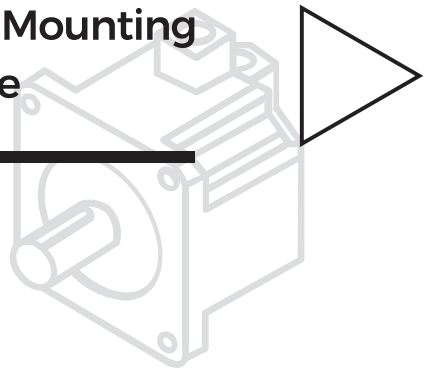

Connection Dimensions for BMT Shaft Extension

J1

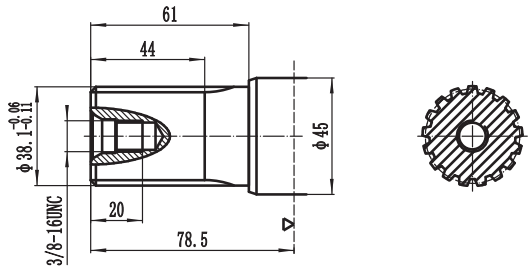

17-DP12/24
Φ38.1 Involute Spline Shaft

J4

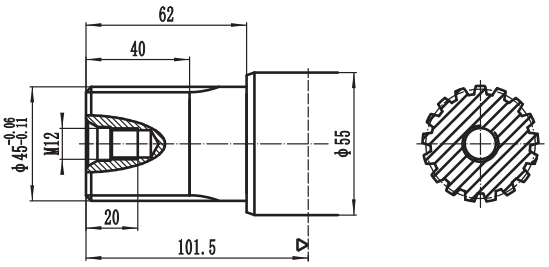

17-m2.5
Φ45 Involute Spline Shaft

J2

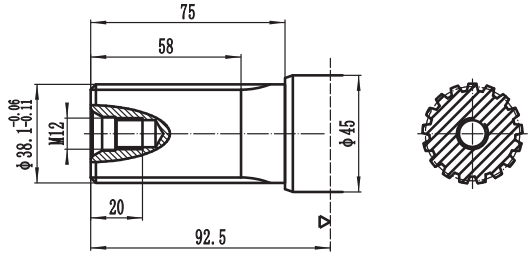

17-DP12/24
Φ38.1 Involute Spline Shaft

J5

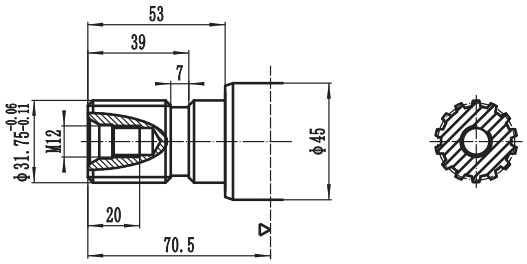

14-DP12/24
Φ31.75 Involute Spline Shaft

J3

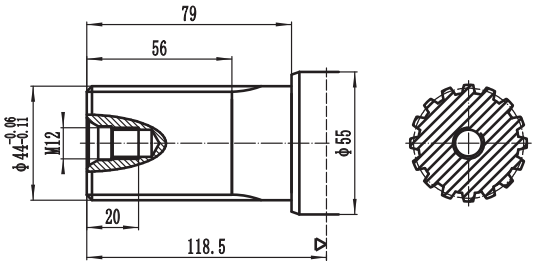

16-m2.5
Φ44 Involute Spline Shaft

J6

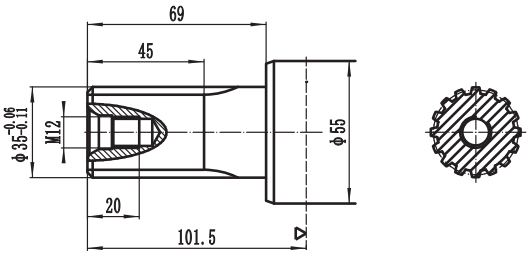

16-m2
Φ35 Involute Spline Shaft

Motor Mounting Surface

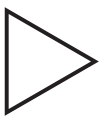

Output Shaft Rotation Direction: Standard

When facing the motor shaft extension direction, the shaft rotates:

When oil port A is at high pressure, the output shaft rotates clockwise.

When oil port B is at high pressure, the output shaft rotates counterclockwise.

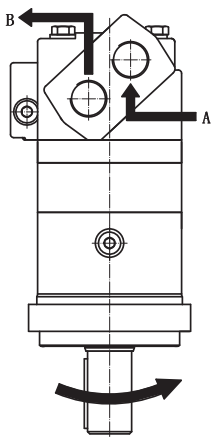

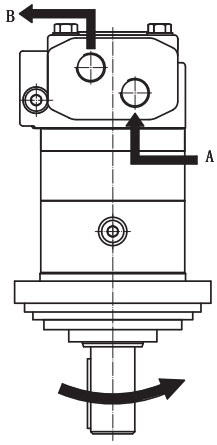

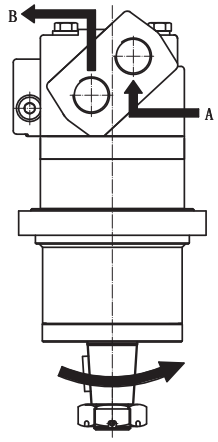

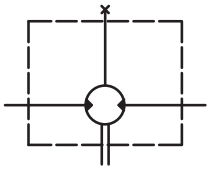

Motor Principle Diagram

BMT Motor Radial Force Curve

Coordinate data points

Distance (mm)	-100	-75	-50	-25	0	25	50	75	100
Force (daN)	1100	1600	2000	2600	3200	2000	1400	1000	700

Coordinate data points

Distance (mm)	-175	-150	-125	-100	-85	-75	-50	-25	0	17
Force (daN)	1300	1800	2200	2900	3200	2700	1800	1200	900	800

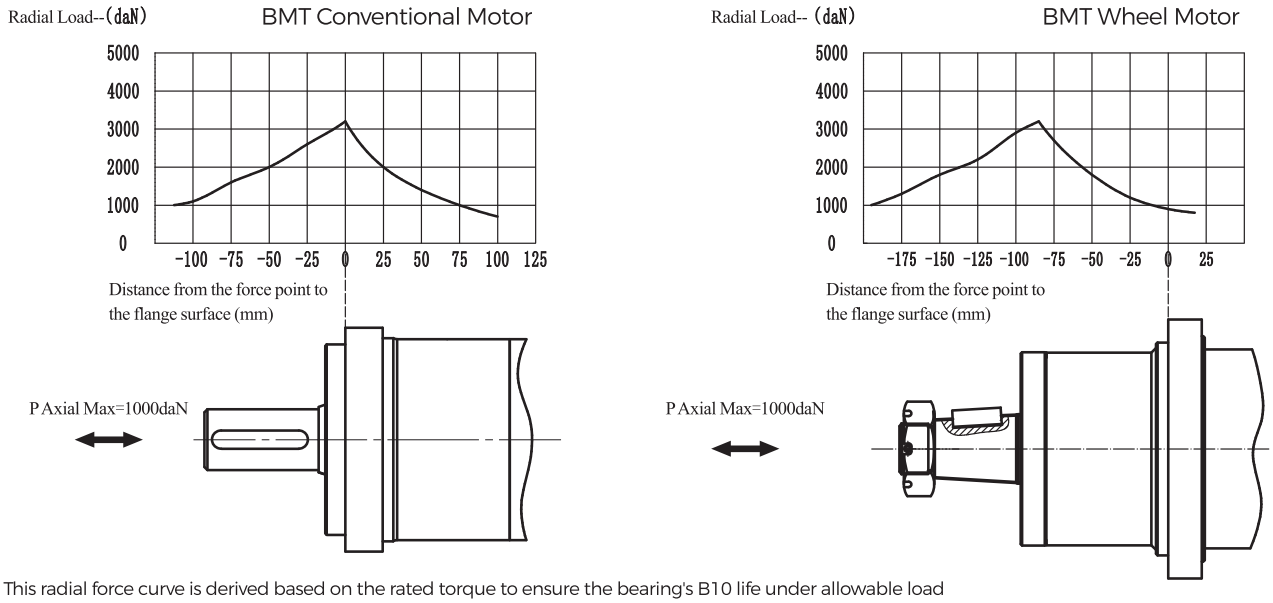

This radial force curve is derived based on the rated torque to ensure the bearing's B10 life under allowable load (2000 hours or 12x10^6 rotations at 100 rpm). For other speed conditions, a specific coefficient must be applied.

Ordering Information for Cycloidal Hydraulic Motor of BMT Series

Ordering Information:

1	2	3	4	5	6	7	8	9
BMT –		–	–	–	–	–	–	–

1	Product Series	BMT							
2	Displacement (ml/r)	195	245	310	390	490	625	800	985

3	
Code	Installation Flange, Mount Stopper
F1	4-Ø14.5 Small square flange Ø162, Installation Stopper Ø127×13.5
F2	4-Ø14.5 Small square flange Ø162, Installation Stopper Ø125×13.5
F3	4-Ø16.5 Small square flange Ø162, Installation Stopper Ø127×13.5
F4	4-Ø14.5 Small square flange Ø160, Installation Stopper Ø125×5.5
F5	4-Ø14.5 Small square flange Ø160, Installation Stopper Ø125×10.5
F6	4-Ø18 Large square flange Ø200, Installation Stopper Ø160×8
F7	4-Ø14.5 Wheel motor, Installation Stopper Ø139.7×8

4	
Code	Output Shaft
P1	Ø40 flat key shaft, flat key 12×8×63, shaft length 75
P2	Ø40 flat key shaft, flat key 12×8×45, shaft length 58
P3	Ø40 flat key shaft, flat key 12×8×70, shaft length 79
P4	Ø50 flat key shaft, flat key 14×9×70, shaft length 79
P5	Ø38.1 flat key shaft, flat key 9.52×9.52×57, shaft length 75
P6	Ø38.1 flat key shaft, flat key 9.52×9.52×52, shaft length 61
P7	Ø35 flat key shaft, flat key 10×8×45, shaft length 58
P8	Ø31.75 flat key shaft, flat key 7.96×7.96×42, shaft length 57
H1	Ø40 rectangular Spline Shaft, 6-40×35×10, shaft length 61
H2	Ø40 rectangular Spline Shaft, 6-40×35×10, shaft length 79
H3	Ø42 rectangular Spline Shaft, 8-42×36×7, shaft length 58.5
H4	Ø35 rectangular Spline Shaft, 6-35×29×10, shaft length 62
H5	Ø35 rectangular Spline Shaft, 6-35×29×10, shaft length 76
J1	Ø38.1 involute spline shaft DP12/24, 17 teeth, shaft length 61
J2	Ø38.1 involute spline shaft DP12/24, 17 teeth, shaft length 75
J3	Ø44 involute spline shaft, 16 teeth, modulus 2.5, shaft length 79
J4	Ø45 involute spline shaft, 17 teeth, modulus 2.5, shaft length 62
J5	Ø31.75 involute spline shaft DP12/24, 14 teeth, shaft length 53
J6	Ø35 involute spline shaft, 16 teeth, modulus 2, shaft length 69
C1	Ø44.5 keyed shaft, keyway 1:8, shaft length 54
C2	Ø45 keyed shaft, keyway 1:10, shaft length 54

8					
Code	External Drain Port	Code	External Drain Port	Code	External Drain Port
Ta0	None	Ta2	G1/4	Ta4	9/16-18UNF O-ring
Ta1	M14x1.5	Ta3	7/16-20UNF O-ring	Ta5	M10x1

5	
Code	Oil Port
A/B-1	M33x2
A/B-2	M27x2
A/B-3	M24x1.5
A/B-4	M22x1.5
A/B-5	G1
A/B-6	G3/4
A/B-7	G1/2
A/B-8	1 1/16-12UN O-ring
A/B-9	1 5/16-12UN O-ring

6	
Code	External Drain Port
T0	None
T1	M14x1.5
T2	G1/4
T3	7/16-20UNF O-ring
T4	9/16-18UNF O-ring

7	
Code	Oil Port Types
Y1	Standard oil port
Y2	4-M12, Ø16, center distance 38×38
Y3	Center distance 40×23
Y4	Center distance 50×24
Y5	Center distance 44×20
Y6	4-M10, center distance 40×23
Y7	4-M12, center distance 50×24
Y8	4-M10, center distance 44×20

9	
Code	Rotation
None	Standard
R	Reverse

Cycloidal Hydraulic Motors of BMK Series

- End-face flow distribution structure, high flow distribution accuracy
- Advanced rotor and stator parameter design, low starting pressure, high efficiency, and good maintainability
- Uses tapered roller bearing structure, strong ability to withstand axial and radial loads, can directly drive working mechanisms, with a wide range of applications
- Higher working pressure, large output torque
- Various flange, output shaft, oil port, and other installation configurations available.

BMK Technical Parameters

Displacement (ml/r)		110	130	160	205	245	310	395	495	625
Flow (L/min)	Maximum Continuous	75	95	95	95	95	95	95	95	95
	Intermittent	95	115	115	130	130	130	150	150	150
Speed (rpm)	Maximum Continuous	697	722	582	383	383	303	239	191	151
	Intermittent	868	862	690	532	532	422	376	305	241
Pressure (MPa)	Maximum Continuous	20.5	20.5	20.5	20.5	20.5	20.5	19	14	11.5
	Intermittent	31	31	31	26	26	26	24	17	14
Torque (N.m)	Maximum Continuous	320	375	485	705	705	850	930	945	970
	Intermittent	470	560	705	845	845	1065	1185	1170	1180

- The maximum continuous value refers to the maximum value at which the motor of this displacement can operate continuously.
- The intermittent value refers to the maximum value at which the motor of this displacement can operate for 6 seconds within 1 minute.
- The motor should not be used simultaneously at maximum pressure and maximum speed.
  Recommended oil: Anti-wear hydraulic oil, with a solid contamination level of ISO 18/15 for the working fluid.
- The maximum working oil temperature is 80°C.
- The motor can be used in series or parallel, and when used in series or parallel, the back pressure should not exceed 5 MPa. If exceeded, it is recommended to connect an external drain pipe, which should preferably be directly connected to the oil tank.
- The motor should undergo a break-in period before operating at full load, recommended to run at less than 30% of the maximum working pressure for 1 hour.

Performance Parameters for BMK Series

Continuous

Intermittent

BMK-110 Pressure (Mpa)

Flow (L/min)	3.5	7	10.5	14	17	20.5	24	27.5	31
7.5	50	105	155	210	260	305	355	390	
	67	62	56	50	44	36	28	18	
15	50	105	160	210	260	310	355	400	440
	136	123	110	97	84	70	56	42	28
23	55	110	160	210	260	310	360	410	155
	204	200	193	184	174	163	150	136	121
30	50	105	160	210	265	315	365	415	455
	274	270	262	253	241	228	213	196	179
38	50	105	160	215	265	320	370	420	460
	344	340	331	322	308	292	274	255	236
45	50	105	160	210	265	320	370	420	460
	414	410	400	390	374	355	335	313	292
53	50	105	160	210	265	320	370	420	465
	484	480	469	458	440	419	446	471	348
61	50	105	160	210	265	320	375	425	465
	553	549	537	525	505	482	455	428	404
68	50	105	160	210	265	320	375	425	465
	622	618	606	593	570	545	516	485	460
76	50	100	155	210	265	320	375	430	470
	964	690	677	664	638	611	579	545	518
95	45	95	155	210	260	320	375	425	
	868	861	838	816	792	767	729	690	

BMK-130 Pressure (Mpa)

Flow (L/min)	3.5	7	10.5	14	17	20.5	24	27.5	31
7.5	60	125	185	240	300	360	405	455	460
	56	53	47	42	40	38	29	20	12
15	60	125	185	250	305	365	415	465	515
	114	111	105	100	95	90	70	50	37
23	60	125	185	250	305	365	420	470	525
	170	167	161	156	149	142	123	104	91
30	60	120	185	250	310	370	425	480	535
	225	222	216	210	202	194	176	158	145
38	60	120	185	250	310	375	430	490	545
	281	278	272	266	256	246	229	212	189
45	55	120	185	250	310	375	435	495	550
	338	335	329	323	312	300	282	263	237
53	55	120	185	250	310	375	435	495	550
	396	392	386	380	368	355	335	315	286
61	55	120	185	250	310	375	435	495	555
	453	449	443	437	424	410	388	366	335
68	55	120	185	250	310	375	435	500	560
	511	506	500	494	480	465	442	418	384
76	55	120	185	250	310	375	440	500	
	569	564	559	551	536	520	495	470	
83	50	115	180	245	310	375	440	500	
	628	624	615	606	590	573	547	520	
95	50	115	180	245	305	375	435	500	
	718	714	702	690	672	653	625	595	
115	45	105	170	235	300	360	425		
	862	855	842	827	806	783	749		

BMK-160 Pressure (Mpa)

Flow (L/min)	3.5	7	10.5	14	17	20.5	24	27.5	31
7.5	80	155	235	315	375	450	510	575	630
	45	41	40	37	32	29	27	25	13
15	80	160	240	320	385	455	520	590	645
	92	90	88	84	76	73	62	51	35
23	80	160	240	320	395	470	540	605	665
	135	134	131	126	120	114	90	75	57
30	80	165	245	330	400	480	550	620	680
	182	180	176	171	163	154	138	122	100
38	80	165	250	335	410	485	555	630	695
	229	226	221	216	206	194	182	169	142
45	80	165	245	330	405	485	555	630	700
	274	272	266	260	250	238	224	209	182
53	75	160	245	325	405	480	555	630	700
	319	318	311	304	394	282	266	249	222
61	75	160	240	325	400	480	555	630	705
	364	362	356	348	338	326	308	289	262
68	75	155	235	320	400	480	555	635	705
	409	407	401	392	382	370	350	329	302
76	70	150	235	315	395	480	555	635	
	458	456	448	440	429	417	396	373	
83	70	150	235	315	396	475	555	635	
	506	502	494	484	473	461	438	413	
95	70	150	230	315	395	475	555	630	
	578	573	563	552	540	526	501	474	
115	65	145	225	305	390	450	525		
	693	687	675	661	647	630	600		

BMK-205 Pressure (Mpa)

Flow (L/min)	3.5	7	10.5	14	17	20.5	24	27.5	31
7.5	95	190	270	355	460	540	610	680	700
	35	34	32	29	27	25	22	16	8
15	100	200	295	385	480	570	645	715	760
	73	71	70	68	61	57	45	35	23
23	100	205	295	400	495	585	665	745	800
	106	105	103	101	98	90	81	74	65
30	100	205	300	400	500	590	680	765	
	143	142	138	136	132	125	116	109	
38	95	205	305	405	505	600	690	780	
	180	179	174	170	166	160	152	143	
45	95	205	305	405	500	600	690		
	216	215	211	202	200	194	185		
53	95	200	300	400	500	600	690		
	254	252	248	243	237	229	219		
61	95	200	300	400	500	595	690		
	290	289	284	280	272	264	253		
68	90	200	300	400	495	595	690		
	327	325	321	316	308	298	287		
76	90	195	295	395	495	595	690		
	364	362	358	353	345	334	321		
83	90	190	295	395	495	595			
	400	398	394	389	380	368			
95	85	185	290	395	495	590			
	456	453	448	442	434	421			
115	80	175	285	380	475	570			
	546	542	537	529	520	504			

Performance Parameters for BMK Series

BMK-245 Pressure (Mpa)

Flow (L/min)	3.5	5	7	8.5	10.5	12	14	15.5	17	19	20.5	22.5	24	26
7.5	115 30	170 29	230 29	285 28	345 27	385 26	445 24	500 23	555 22	600 20	650 18	695 16	750 14	810 11
15	115 61	175 60	235 60	295 59	355 59	410 58	465 56	525 53	580 49	630 47	680 44	730 42	775 39	830 36
23	120 90	175 90	235 89	295 88	355 88	415 86	475 83	530 80	590 75	645 72	695 70	750 67	795 63	840 59
30	115 121	175 120	240 119	295 118	355 117	415 115	475 113	535 111	595 106	645 103	700 99	755 96	800 91	845 87
38	115 151	175 150	235 148	295 148	355 147	415 145	480 143	540 141	600 137	650 133	705 129	760 125	805 120	
45	110 182	175 180	235 179	295 178	355 178	415 176	475 173	540 170	595 166	650 161	705 157	755 152		
53	110 212	170 211	235 210	295 209	355 208	415 206	475 203	535 200	595 195	650 190	705 185			
61	105 243	170 242	230 241	290 240	355 239	415 236	475 232	535 229	595 225	650 219	705 213			
68	105 274	165 273	230 272	290 270	350 269	415 266	470 262	530 259	590 254	645 248	700 241			
76	105 305	165 304	225 303	290 302	350 300	410 296	470 292	530 288	590 283	645 276				
83	100 336	160 335	225 334	280 332	345 330	405 326	465 323	530 319	590 313	640 306				
95	95 382	155 381	220 380	280 378	335 376	400 372	460 369	525 365	585 357					
115	75 457	140 456	210 455	270 453	330 450	390 445	445 442	505 437	560 427					
130		125 532	195 531	255 528	315 525	375 519	440 515	495 509						

Continuous

Intermittent

Torque(N.M):840
Speed(RPM):59

BMK-310 Pressure (Mpa)

Flow (L/min)	3.5	5	7	8.5	10.5	12	14	15.5	17	19	20.5	22.5	24	26
7.5	145 23	220 22	295 22	365 21	435 21	505 20	575 20	640 19	710 18	780 18	850 17	920 17	995 16	1065 15
15	145 47	220 46	300 46	370 45	445 45	520 44	590 44	665 43	735 42	810 42	880 41	955 41	1020 41	
23	145 71	225 70	300 70	675 69	450 69	530 68	600 67	675 66	750 64	825 64	895 63			
30	145 96	225 95	300 95	380 94	455 94	530 93	605 92	680 91	755 89	825 89				
38	145 120	225 120	300 119	375 119	460 118	535 117	610 116	685 115	760 112	835 109				
45	140 144	220 144	295 143	375 142	455 142	535 141	610 140	685 139	760 135					
53	140 169	215 168	295 168	375 167	450 167	530 165	610 164	685 163	760 159					
61	140 193	215 192	290 192	370 190	450 189	530 188	610 187	685 185						
68	135 217	210 216	290 216	365 214	445 213	530 211	605 209	680 207						
76	135 242	210 242	285 241	365 240	440 238	530 236	605 234	680 232						
83	130 266	205 266	285 265	360 264	440 262	525 260	600 258							
95	120 303	200 302	285 301	355 300	430 299	520 296	595 293							
115	115 363	190 362	275 360	350 359	420 358	510 354	580 351							
130		180 422	265 420	335 419	400 418	495 413								

BMK-395 Pressure (Mpa)

Flow (L/min)	3.5	5	7	8.5	10.5	12	14	15.5	17	19	20.5	22.5	24
7.5	170 18	260 17	340 16	435 16	520 15	600 15	680 14	765 13	845 13	930 12	1015 11	1068 10	1120 8
15	185 38	280 37	375 36	465 36	555 35	635 35	720 34	810 34	890 33	990 32			
23	190 57	285 56	385 55	470 54	565 53	655 52	745 50	835 49	930 47				
30	190 76	290 75	385 74	480 73	575 72	665 70	750 68	845 66					
38	190 95	290 94	385 93	480 92	575 91	670 89	760 86	855 84					
45	190 114	285 113	380 112	480 111	575 110	665 108	755 105						
53	185 133	280 132	380 131	480 130	575 129	665 127	750 124						
61	185 153	280 152	380 151	480 149	575 147	660 145							
68	180 172	275 171	375 170	475 168	570 166	655 164							
76	180 191	270 190	375 189	475 187	570 185	655 183							
83	170 210	265 209	365 208	470 206	565 204	650 201							
95	155 238	255 237	350 236	460 235	560 233	645 230							
115	120 285	185 284	255 282	340 281	435 279								
130		170 331	240 330	325 328	425 325								
150			230 376	315 374	410 371								

Performance Parameters for BMK Series

BMK-495 Pressure (Mpa)

Flow (L/min)	3.5	5	7	8.5	10.5	12	14	15.5	17
7.5	220 17	335 17	450 16	565 15	680 12	790 11	905 10	1015 8	
15	225 29	345 28	470 27	595 26	710 23	830 21	945 19	1060 17	1120 14
23	225 44	350 43	475 42	595 40	715 37	840 35	955 32	1070 30	
30	230 60	355 59	475 57	600 55	720 52	845 49	960 46		
38	225 75	350 74	475 72	600 70	720 66	845 63	960 59		
45	225 90	350 89	475 87	600 85	720 81	845 77			
53	220 105	345 104	470 102	595 100	720 96	840 92			
61	215 120	340 119	465 117	595 115	715 111	840 107			
68	210 136	335 134	465 132	590 130	715 125	835 121			
76	205 152	330 150	460 147	590 145	710 140				
95	190 189	315 187	455 184	590 182	695 177				
115	170 228	300 226	425 223	550 220	675 215				
130		270 265	395 263						
150		245 305	370 303						

Torque(N.M):1120
Speed(RPM):14

Continuous

Intermittent

BMK-625 Pressure (Mpa)

Flow (L/m	3.5	5	7	8.5	10.5	11	11.5	12.5	14
7.5	270 14	415 14	565 13	715 12	860 11	915 10	970 9	1030 8	1140 7
15	275 23	425 23	585 22	745 21	895 19	950 18	1015 17	1085 16	1180 14
23	280 35	430 35	590 34	750 33	900 31	950 30	1005 29	1070 28	
30	280 48	440 47	595 46	750 45	905 43	955 43	1010 42		
38	290 60	450 59	600 58	755 57	910 54	970 53	1035 52		
45	295 72	460 71	605 70	755 69	915 65	980 64			
53	285 84	450 83	600 82	755 81	910 77	975 76			
61	280 95	440 95	595 94	755 93	910 89	970 88			
68	270 107	430 107	590 105	750 104	830 100				
76	265 120	425 120	590 118	750 116					
95	245 150	405 149	565 147	725 146					
115	225 180	385 179	530 177	700 176					
130		355 210	515 208						
150		320 241	485 239						

Installation Dimensions for BMK Series

F1

4-hole small square flange

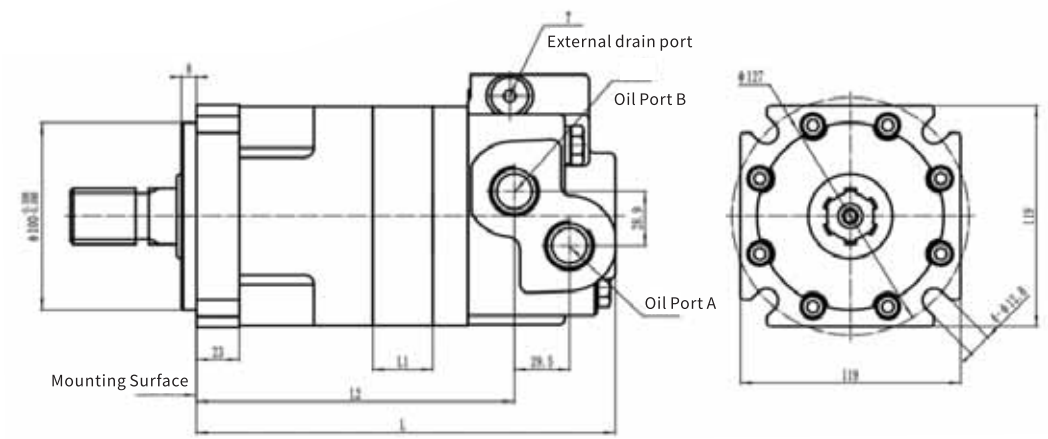

F2

4-hole small square flange

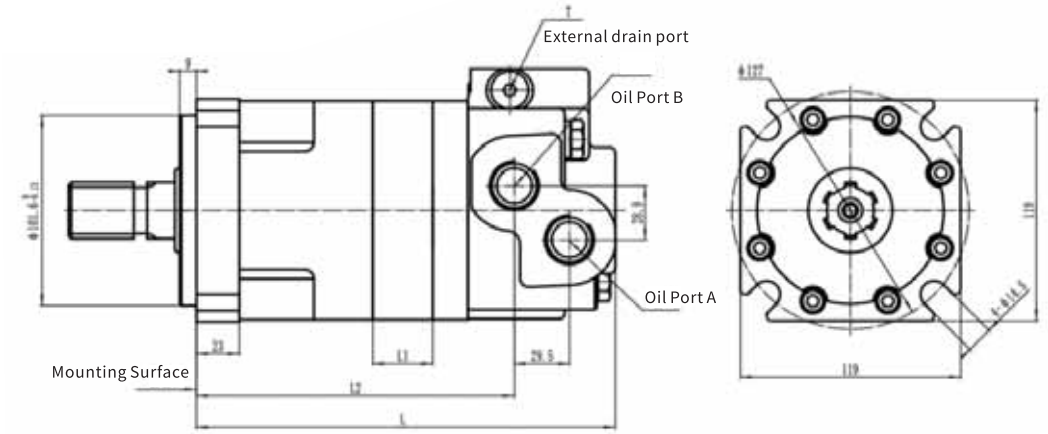

F3

4-hole large square flange

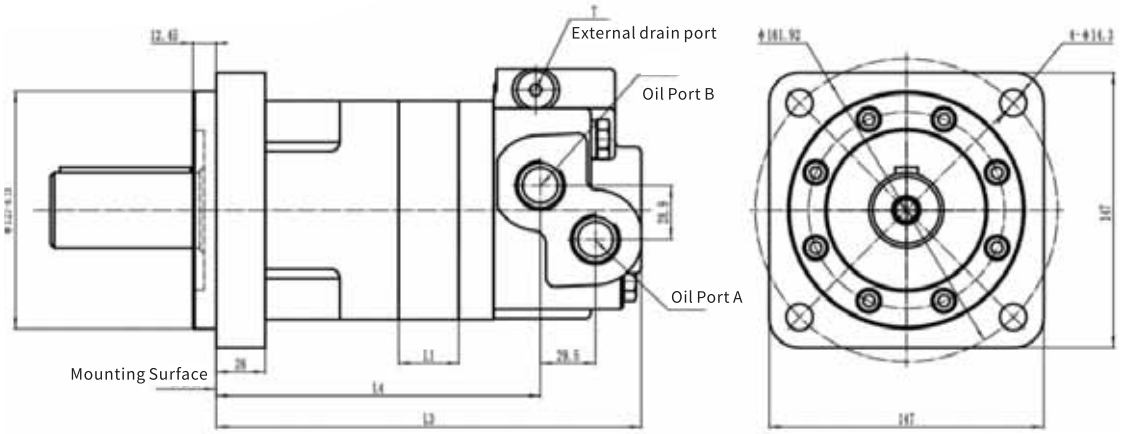

Model	BMK-110	BMK-130	BMK-160	BMK-205	BMK-245	BMK-310	BMK-395	BMK-495	BMK-625
L1	14.4	17.1	21.1	26.8	32.1	40.6	51.5	64.5	83

Installation Dimensions for BMK Series

F4

Wheel motor

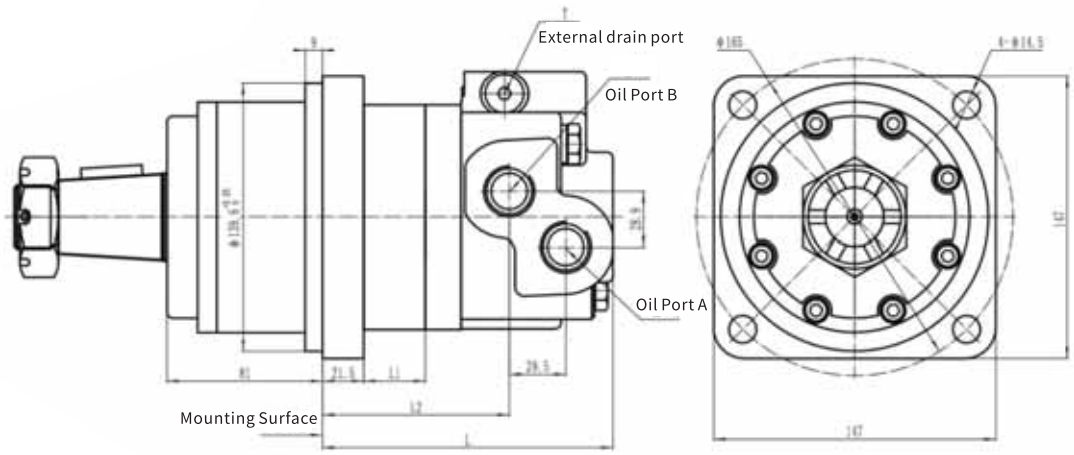

F5

4-hole rear flange

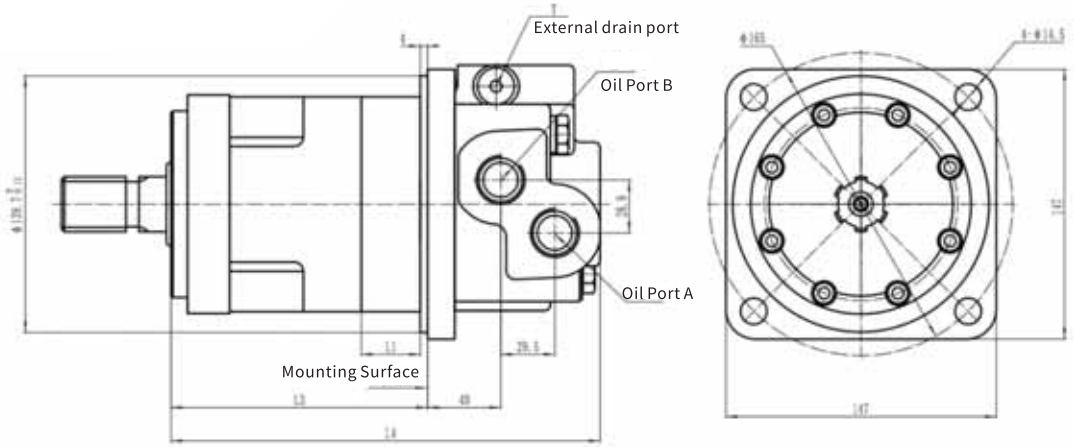

Model	BMK-110	BMK-130	BMK-160	BMK-205	BMK-245	BMK-310	BMK-395	BMK-495	BMK-625
L1	14.4	17.1	21.1	26.8	32.1	40.6	51.5	64.5	83
L	134	136.5	140.5	146.5	151.5	160	171	184	202.5
L2	80	82.5	86.5	92.5	97.5	106	117	130	148.5
L3	122.5	125	129	135	140	148.5	159.5	172.5	191
L4	216	218.5	222.5	228.5	233.5	242	253	266	284.5

Common Threads for A/B		Common Threads for External Drain Port T	
A/B-1	1-1/16-12UN 0-ring	T1	7/16-20UNF 0-ring
A/B-2	7/8-14UNF 0-ring	T2	9/16-18UNF 0-ring
A/B-3	G3/4	T3	G1/4
A/B-4	M22x1.5	T4	M14x1.5

Connection Dimensions for BMK Shaft Extension

P1

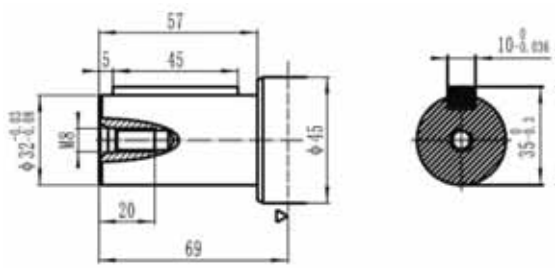

Ø 32 Cylindrical Shaft
Flat Key 10×8×45

H1

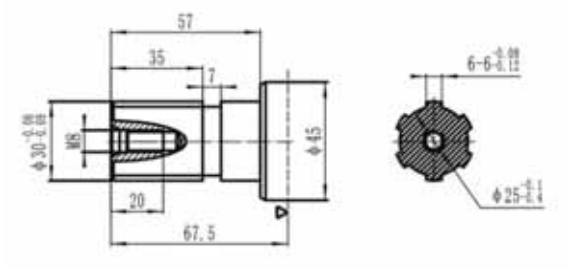

Ø 30 Rectangular Spline Shaft
6-30×25×6

P2

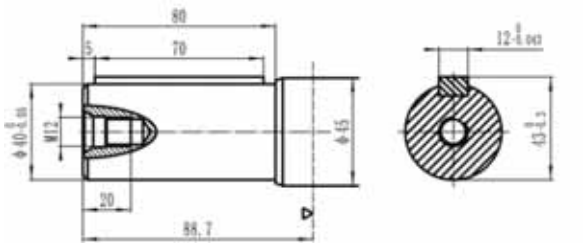

Ø 40 Cylindrical Shaft
Flat Key 12×8×70

H2

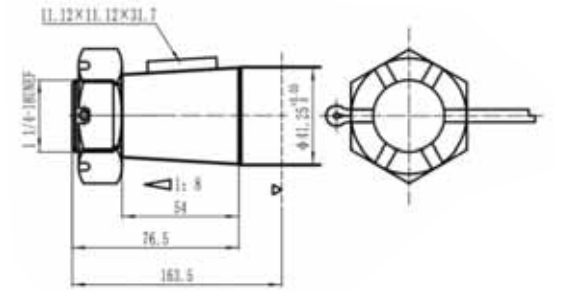

Ø 41.5 Tapered Shaft
Taper 1:8

Motor Mounting Surface

Output Shaft Rotation Direction: Standard

When facing the motor shaft extension direction, the shaft rotates:

When oil port A is at high pressure, the output shaft rotates clockwise.

When oil port B is at high pressure, the output shaft rotates counterclockwise.

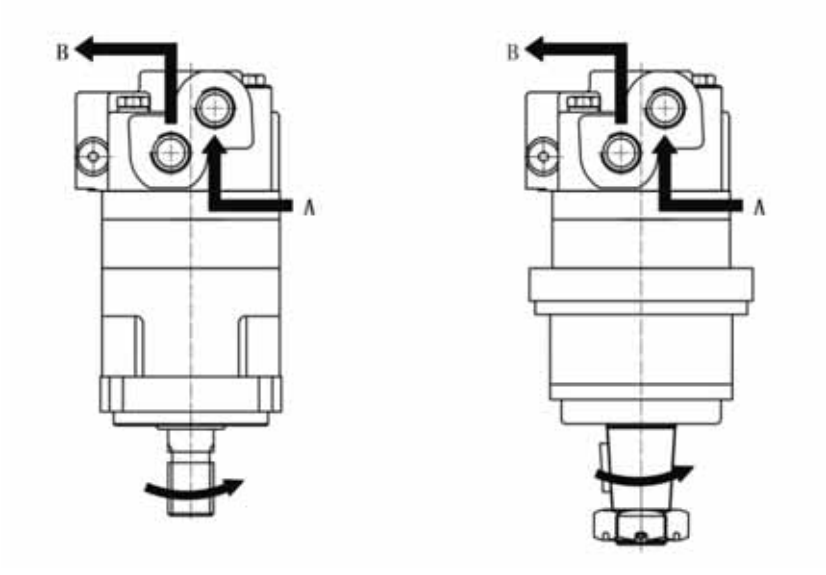

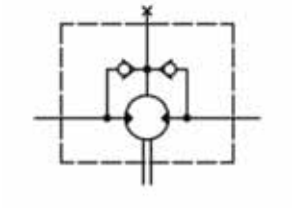

Motor Principle Diagram

BMK Radial Force Curve

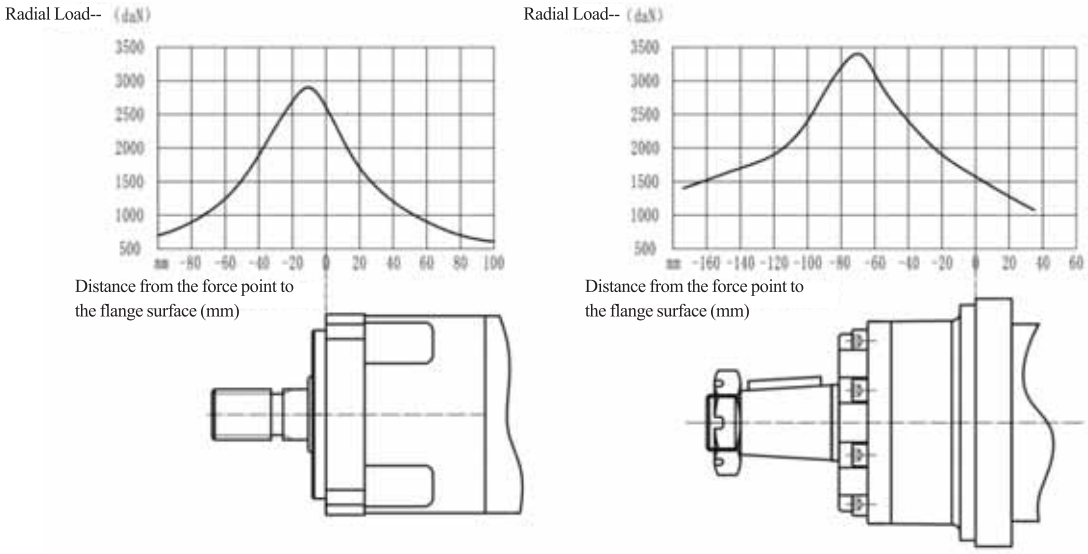

Ordering Information for Cycloidal Hydraulic Motor of BMK Series

Ordering Information:

1		2		3		4		5		6		7
BMK	–		–		–		–		–		–	

1	Product Series	BMK								
2	Displacement (ml/r)	110	130	160	205	245	310	395	495	625

3	
Code	Installation Flanges, Stop Rings
F1	4-Ø12.8 4-hole small square flange, stop ring installationØ100 × 8
F2	4-Ø14.5 4-hole small square flange, stop ring installation Ø101.6 × 9
F3	4-Ø14.3 4-hole large square flange, stop ring installationØ127 × 12.45
F4	4-Ø14.5 Wheel motor, stop ring installationØ136.9 × 9

4	
Code	Output Shaft
P1	Ø32 flat key shaft, flat key 10 × 8 × 45, shaft length57
P2	Ø40 flat key shaft, flat key 12 × 8 × 70, shaft length80
H1	Ø30 rectangular spline shaft, 6-30 × 25 × 6, shaft length57
C1	Ø41.25 tapered shaft, taper 1:8, shaft length 54

5	
Code	Oil Port
A/B-1	1-1/16-12UN 0-ring
A/B-2	7/8-14UNF 0-ring
A/B-3	G3/4
A/B-4	M22x1.5

6	
Code	External Drain Port
T0	None
T1	7/16-20UNF 0-ring
T2	9/16-18UNF 0-ring
T3	G1/4
T4	M14x1.5

7	
Code	Rotation
None	Standard
R	Reverse

Cycloidal Hydraulic Motors of BMV Series

- End-face flow distribution structure, high flow distribution accuracy
- Advanced rotor and stator parameter design, low starting pressure, high efficiency, and good maintainability
- Uses tapered roller bearing structure, strong ability to withstand axial and radial loads, can directly drive working mechanisms, with a wide range of applications
- Higher working pressure, large output torque
- Various flange, output shaft, oil port, and other installation configurations available

BMV Technical Parameters

Displacement (ml/r)		310	400	500	630	800	1000	1250	1600
Flow (L/min)	Maximum Continuous	150	150	150	150	150	150	150	150
	Intermittent	200	200	200	200	190	190	190	190
Speed (rpm)	Maximum Continuous	470	370	300	238	170	140	110	80
	Intermittent	630	490	400	320	240	190	150	100
Pressure (MPa)	Maximum Continuous	20	20	20	18	16	16	14	12
	Intermittent	24	24	24	21	18	18	18	18
Torque (N.m)	Maximum Continuous	850	1050	1350	1560	1750	2000	2100	2300
	Intermittent	1050	1300	1650	1830	2000	2320	2900	3200

- The maximum continuous value refers to the maximum value at which the motor of this displacement can operate continuously.
- The intermittent value refers to the maximum value at which the motor of this displacement can operate for 6 seconds within 1 minute.
- The motor should not be used simultaneously at maximum pressure and maximum speed.
- Recommended oil: Anti-wear hydraulic oil, with a solid contamination level of ISO 18/15 for the working fluid.
- The maximum working oil temperature is 80°C.
- The motor can be used in series or parallel, and when used in series or parallel, the back pressure should not exceed 5 MPa. If exceeded, it is recommended to connect an external drain pipe, which should preferably be directly connected to the oil tank.
- The motor should undergo a break-in period before operating at full load, recommended to run at less than 30% of the maximum working pressure for 1 hour.

Performance Parameters for BMV Series

BMV-310 Pressure (Mpa)

Flow (L/min)	3.5	7	10	14	18	20	24
10	132	278	415	576	700	800	945
	28	25	24	23	21	18	15
20	145	297	440	600	745	845	1010
	58	57	56	55	54	54	47
50	141	295	439	618	770	885	1050
	153	152	150	148	148	141	135
75	135	287	433	607	770	888	1057
	233	231	228	223	219	215	206
100	129	280	428	600	765	885	1047
	311	309	307	304	299	294	286
125	116	270	418	592	755	870	1033
	389	387	385	382	378	372	365
150	108	260	411	580	745	855	1019
	471	469	467	462	455	447	433
160	101	253	405	575	737	845	1010
	503	501	497	493	487	478	465
200	77	235	389	560	715	823	989
	630	629	624	618	610	698	575

Continuous

Intermittent

BMV-400 Pressure (Mpa)

Flow (L/min)	3.5	7	10	14	18	20	24
10	175	367	542	740	923	1050	1233
	21	21	20	19	18	17	15
20	187	380	563	778	964	1099	1284
	46	46	45	44	42	41	39
50	190	385	575	803	992	1130	1364
	119	118	118	117	115	113	107
75	186	376	569	800	995	1133	1366
	183	181	178	174	171	165	159
100	164	367	566	789	988	1130	1359
	247	246	244	242	238	234	225
125	159	357	555	777	975	1123	1348
	310	308	305	302	296	288	280
150	151	345	533	764	962	1111	1325
	372	371	369	366	361	350	340
175	136	330	528	748	945	1092	1314
	436	435	431	427	422	415	407
200	113	315	511	735	925	1075	1295
	498	496	492	485	477	470	460

BMV-500 Pressure (Mpa)

Flow (L/min)	3.5	7	10	14	18	20	24
10	232	448	667	920	1140	1296	1540
	18	18	17	17	16	14	11
20	235	480	707	960	1180	1335	1588
	38	37	37	35	34	33	30
50	230	479	726	982	1217	1338	1670
	97	96	95	94	92	89	84
75	226	477	720	987	1234	1413	1690
	146	145	143	141	138	133	125
100	218	470	717	983	1235	1410	1685
	197	195	193	190	185	180	173
125	211	463	711	970	1225	1399	1672
	247	245	244	240	237	233	225
150	193	445	693	966	1198	1369	1663
	300	299	296	293	288	282	270
175	174	427	680	955	1186	1347	1643
	350	349	348	343	339	334	325
200	154	405	648	935	1165	1325	1625
	401	400	398	395	390	380	370

Torque(N.M):1672
Speed(ROM):225

BMV-630 Pressure (Mpa)

Flow (L/min)	3.5	6	9	12	15	18	21
10	260	485	755	1020	1175	1435	1655
	15	14	14	13	13	12	11
20	265	515	775	1020	1220	1490	1728
	30	30	29	29	28	26	24
50	268	515	805	1055	1265	1560	1813
	78	78	77	74	73	71	67
75	250	510	800	1035	1255	1558	1820
	118	117	114	112	110	105	101
100	245	500	795	1015	1250	1550	1822
	157	156	155	152	150	145	140
125	235	475	775	995	1235	1535	1805
	198	197	195	193	191	187	180
150	222	460	757	985	1233	1530	1785
	238	237	236	235	231	229	220
175	195	450	738	975	1205	1515	1770
	280	278	275	274	270	265	260
200	170	435	670	945	1275	1490	1745
	320	320	315	316	313	305	295

Performance Parameters for BMV Series

BMV-800 Pressure (Mpa)

Flow (L/min)	3	5	7	10.5	12	14	16	18
10	235 13	490 13	685 12					
15	230 20	485 20	680 19	1005 17	1145 16	1340 15		
30	297 39	480 38	678 38	1003 37	1142 37	1335 36	1685 35	1920 31
45	295 58	480 58	675 57	1000 57	1140 56	1330 55	1680 54	
60	292 77	475 77	670 75	998 75	1138 74	1329 73	1700 72	
75	288 96	473 95	668 94	995 94	1135 93	1325 92	1695 91	
90	283 115	470 114	660 113	990 112	1132 111	1320 110	1690 110	
105	280 135	465 134	650 133	980 132	1120 130	1312 128		
120		450 153	635 152	968 151	1111 149	1300 145		
140		440 178	620 176	952 175	1100 173			
160			612 198	930 195	1090 190			
190			600 241	913 240	1070 238			

Continuous

Intermittent

BMV-1000 Pressure (Mpa)

Flow (L/min)	3	5	7	10.5	12	14	16	18
15	365 14	602 13	835 13	1250 12	1438 11			
30	364 31	600 31	834 30	1248 30	1432 29	1670 28		
45	362 46	598 45	832 45	1245 44	1428 43	1665 43		
60	360 62	595 61	830 61	1240 60	1420 59	1662 58	2012 57	2315 54
75	358 77	593 76	828 75	1240 74	1415 73	1658 72	2005 72	
90	354 93	590 92	825 91	1235 91	1415 90	1650 89	2003 87	
105	350 108	580 107	800 106	1220 105	1402 104	1648 103		
120		571 123	790 122	1210 120	1395 120	1432 119		
140		552 142	772 142	1195 140	1385 139	1425 138		
160			760 163	1185 162	1368 161			
190			742 192	1165 192	1352 190			

BMV-1250 Pressure (Mpa)

Flow (L/min)	3	5	7	10.5	12	14	16	18
30	468 25	770 24	1070 23	1602 22				
45	465 37	767 36	1068 35	1600 34	1825 33			
60	462 50	763 49	1065 48	1596 47	1822 45			
75	460 62	760 61	1062 60	1592 58	1818 57	2123 57	2655 57	2978 52
90	456 74	758 73	1060 72	1590 71	1516 70	2118 68	2650 67	2975 64
105	453 87	755 86	1058 85	1587 84	1815 82	2115 82	2650 81	2973 79
120		750 98	1050 97	1582 96	1802 95	2110 93	2641 92	2963 91
140		742 113	1041 112	1561 111	1792 109	2008 107		
160			1032 129	1550 128	1782 127	1985 160		
190			1020 153	1532 152	1770 150			

Torque(N.M):2973
Speed(RPM):79

BMV-1600 Pressure (Mpa)

Flow (L/min)	3	5	7	10.5	12	14	16	18
30	625 19	1005 18	1408 17	2135 16				
45	622 29	1003 28	1405 27	2132 26	2355 24			
60	619 38	1000 37	1402 36	2129 35	2351 33			
75	616 48	995 47	1400 46	2127 45	2347 44	2780 44	3178 42	3575 39
90	612 58	992 57	1394 55	2124 54	2345 52	2775 51	3173 49	3572 46
105	605 68	989 67	1389 66	2118 65	2342 65	2772 63	3171 60	3570 57
120		984 75	1387 73	2113 72	2330 72	2766 70	3162 65	3560 63
140		978 79	1375 78	2100 76	2320 74	2763 73		
160			1366 88	2090 86	2310 83	2749 80		
190			1354 105	2075 103	2302 100			

Installation Dimensions for BMV Series

F1

4-hole small square flange

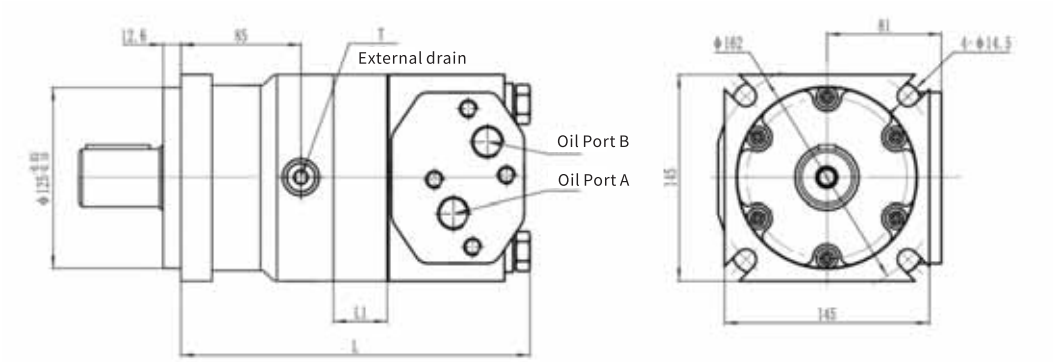

F2

4-hole large square flange

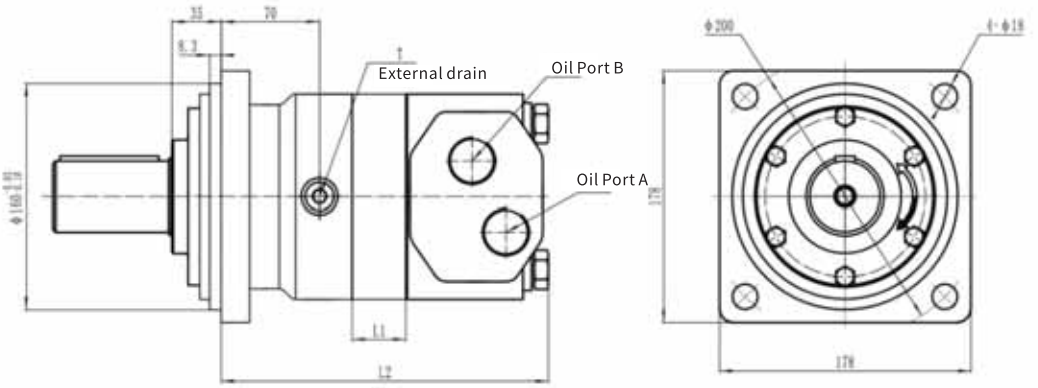

F3

Wheel motor

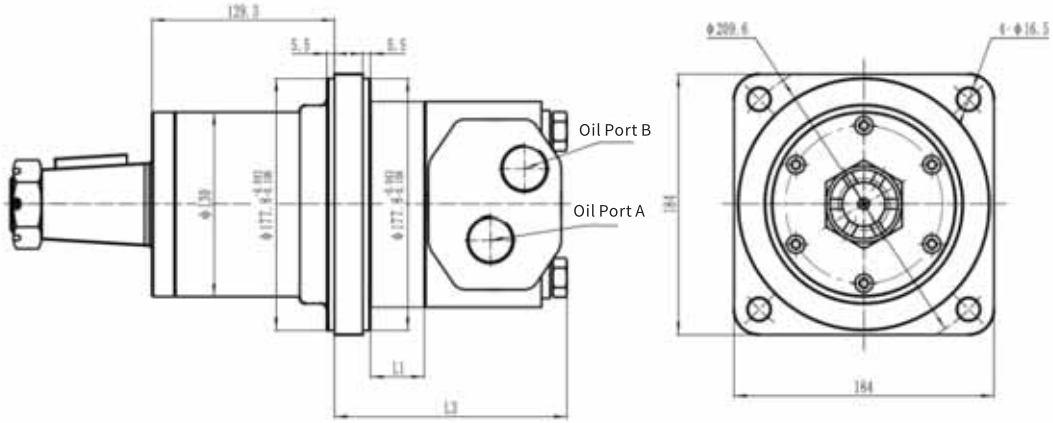

Model	BMV-310	BMV-400	BMV-500	BMV-630	BMV-800	BMV-1000	BMV-1250	BMV-1600
L1	22	28	38	48	62	78	94	126
L	231	237	247	257	271	287	303	335
L2	216	222	232	242	256	272	288	320
L3	149	155	165	175	189	205	221	253

Installation Dimensions for BMV Series

F4

Brake motor

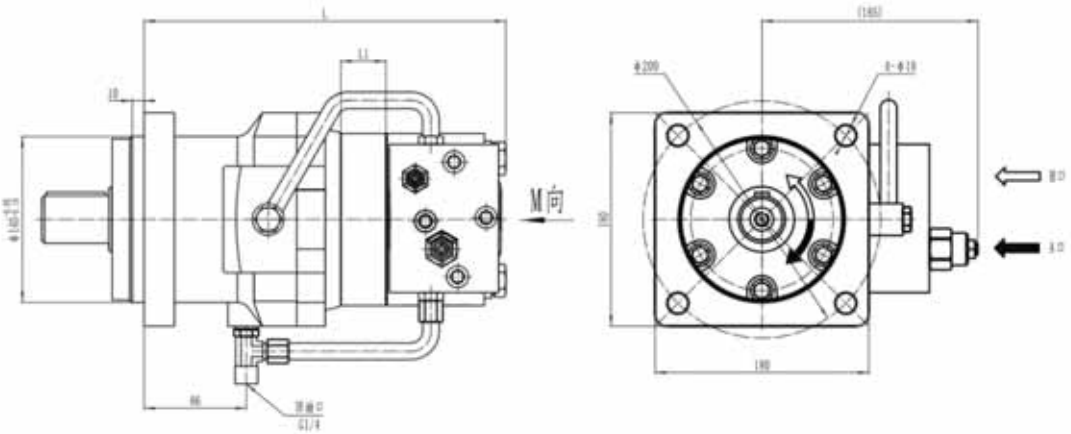

Technical Requirements:

1. Static braking torque: 800 N · m, dynamic braking not allowed
2. Brake release pressure ⩾ 3 MPa
3. Must be used with a return oil port
4. Continuous operation under maximum pressure and maximum flow conditions is not recommended
5. Maximum flow rate of balance valve: 120 L/min
6. When facing the motor shaft extension, if port A is the high-pressure oil port, the output shaft rotates clockwise

M-direction rotation

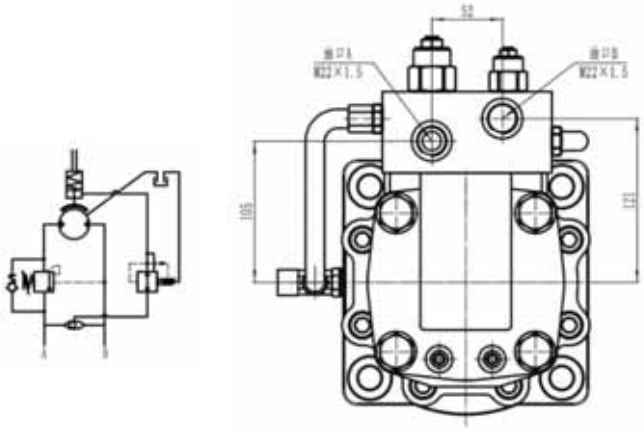

Model	BMV-310	BMV-400	BMV-500	BMV-630	BMV-800	BMV-1000	BMV-1250	BMV-1600
L1	22	28	38	48	62	78	94	126
L	289	295	305	315	329	345	361	393

BMV Oil Port Connection Dimensions

Y1

Center distance 50×24

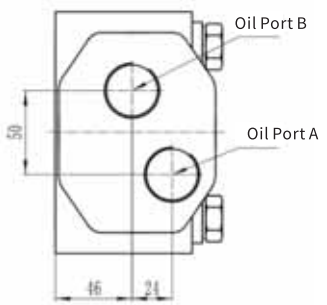

Y2

4-M12, Center distance 50×24

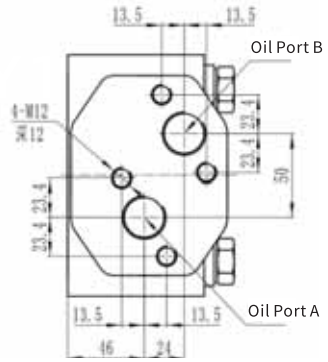

Y3

Center distance 50×24

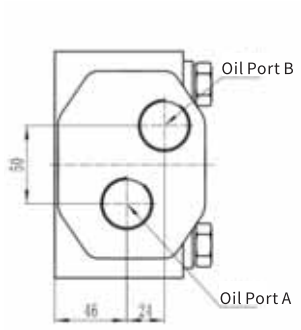

Y4

4-M10, Center distance 40×23

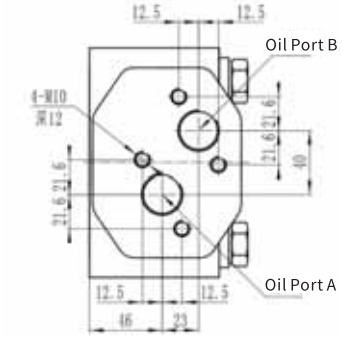

Common Threads for A/B				Common Threads for External Drain Port T	
A/B-1	M33x2	A/B-6	G3/4	T1	无
A/B-2	M27x2	A/B-7	G1/2	T2	M14x1.5
A/B-3	M24x1.5	A/B-8	1 1/16-12UN 0-ring	T3	G1/4
A/B-4	M22x1.5	A/B-9	15/16-12UN 0-ring	T4	7/16-20UNF 0-ring
A/B-5	G1			T5	9/16-18UNF 0-ring
				T6	M10x1

Connection Dimensions for BMV Shaft Extension

P1

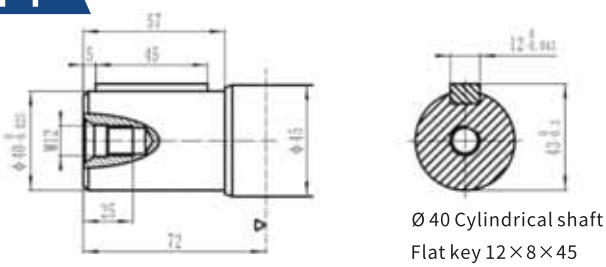

Ø 40 Cylindrical shaft
Flat key 12×8×45

Y1

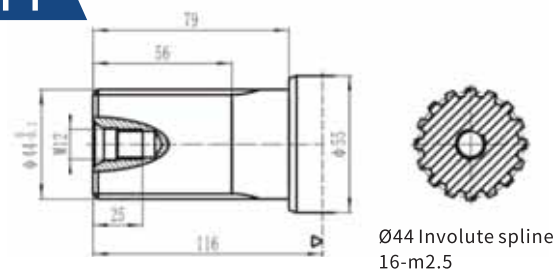

Ø44 Involute spline shaft
16-m2.5

P2

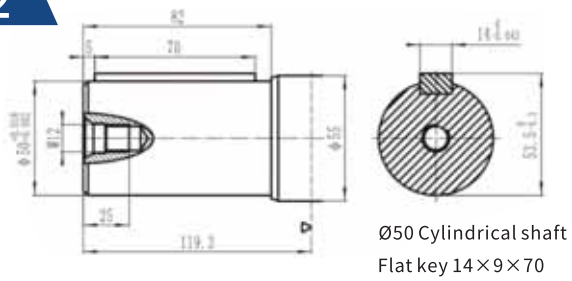

Ø50 Cylindrical shaft
Flat key 14×9×70

Y2

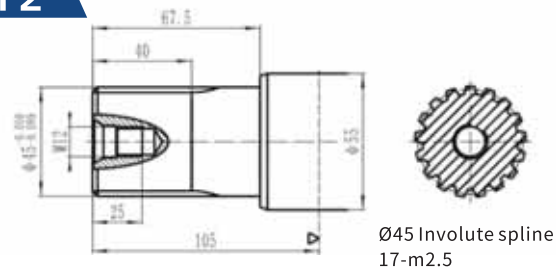

Ø45 Involute spline shaft
17-m2.5

H1

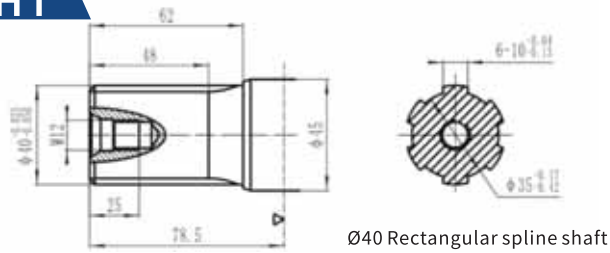

Ø40 Rectangular spline shaft
6-40x35X10

Y3

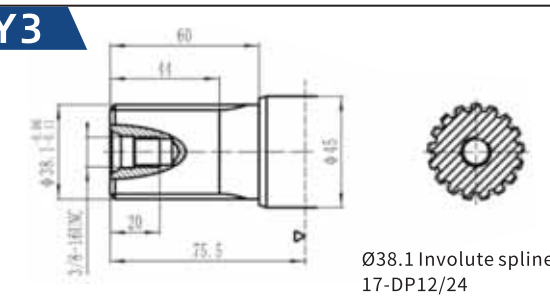

Ø38.1 Involute spline shaft
17-DP12/24

H2

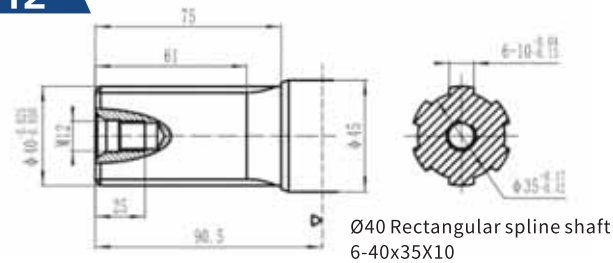

Ø40 Rectangular spline shaft
6-40x35X10

Y4

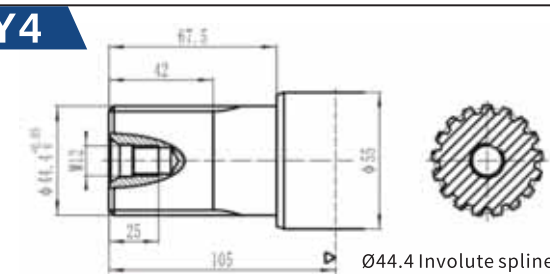

Ø44.4 Involute spline shaft
17-m2.5

Motor Mounting Surface

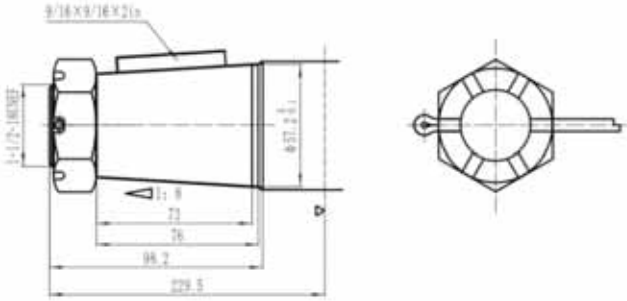

Ø57.2 Tapered shaft
Taper 1:8

Output Shaft Rotation Direction: Standard

When facing the motor shaft extension direction, the shaft rotates:

When oil port A is at high pressure, the output shaft rotates clockwise.

When oil port B is at high pressure, the output shaft rotates counterclockwise.

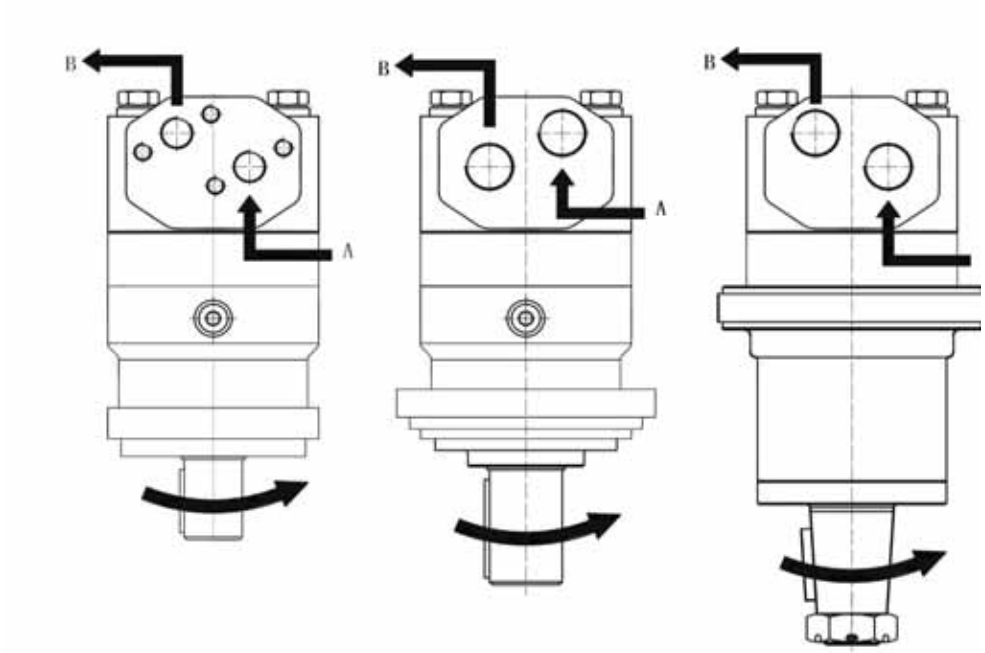

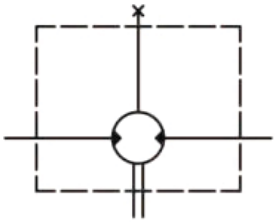

Motor Principle Diagram

BMV Motor Radial Force Curve

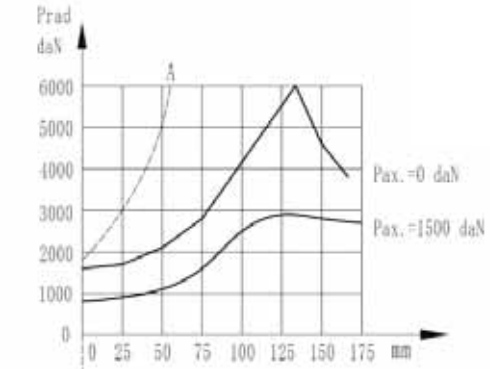

Curve A represents the maximum radial force load. It is recommended that users, to ensure bearing life B10 (200 rpm, 3000 h of operation), use axial and radial loads below the thick line.

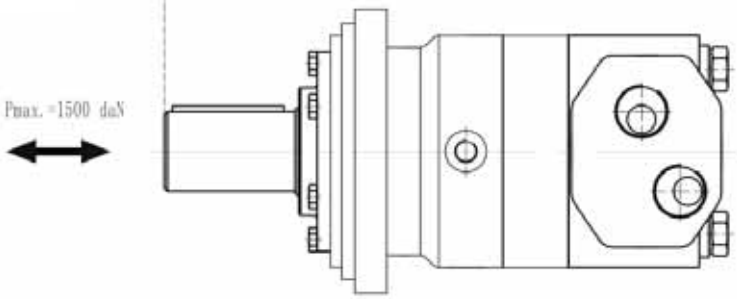

Ordering Information: Product Series Displacement Code

Ordering Information:

1	2	3	4	5	6	7	8
BMV							

1	Product Series	BMV								
2	Displacement (ml/r)	250	315	400	500	630	800	1000	1250	1600

3	
Code	Installation Flanges, Stop Rings
F1	4-Ø14.5 Small square flange Ø162, stop ring installation Ø125 × 12.6
F2	4-Ø18 Large square flange Ø200, stop ring installation Ø160 × 8.3
F3	4-Ø16.5 Wheel motor Ø209.6, stop ring installation Ø177.8 × 5.5
F4	4-Ø18 Brake motor Ø200, stop ring installation Ø140 × 10

4	
Code	Output Shaft
P1	Ø40 flat key shaft, flat key 12 × 8 × 45, shaft length 57
P2	Ø50 flat key shaft, flat key 14 × 9 × 70, shaft length 82
H1	Ø40 Rectangular spline shaft, 6-40 × 35 × 10, shaft length 62
H2	Ø40 Rectangular spline shaft, 6-40 × 35 × 10, shaft length 75
J1	Ø44 Involute spline shaft, 16 teeth, modulus 2.5, shaft length 79
J2	Ø45 Involute spline shaft, 17 teeth, modulus 2.5, shaft length 67.5
J3	Ø38.1 Involute spline shaft, DP12/24, 17 teeth shaft length 60
J4	Ø44.4 Involute spline shaft, 17 teeth, modulus 2.5, shaft length 67.5
C1	Ø57.2 tapered shaft, taper 1:8, shaft length 73

5	
Code	Oil Port
A/B-1	M33 x2
A/B-2	M27 x2
A/B-3	M24x1.5
A/B-4	M22 x1.5
A/B-5	G1
A/B-6	G3/4
A/B-7	G1/2
A/B-8	1 1/16-12UN 0-ring
A/B-9	1 5/16-12UN 0-ring

6	
Code	External Drain Port
T0	None
T1	M14x1.5
T2	G1/4
T3	7/16-20UNF 0-ring
T4	9/16-18UNF 0-ring
T5	M10x1

7	
Code	Oil Port Types
Y1	Center distance 50×24
Y2	4-M12, Center distance 50×24
Y3	Center distance 50×24
Y4	4-M10, Center distance 40×23

8	
Code	Rotation
None	Standard
R	Reverse

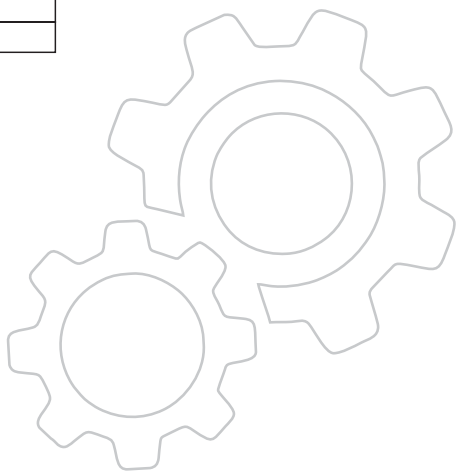

Cycloidal Hydraulic Motors of BME Series

- Advanced rotor and stator parameter design, low starting pressure, high efficiency, and good maintainability
- Adopts a roller bearing structure, with strong ability to withstand axial and radial loads; can directly drive working mechanisms, with a wide range of applications
- Higher working pressure, large output torque
- Various flange, output shaft, oil port, and other installation configurations available
- Integrated with functions such as overflow valves, balancing valves, etc.

BME Technical Parameters

Displacement (ml/r)		125	160	200	230	260	300	350	375	400	475	540	620	750
Flow (L/min)	Maximum Continuous	50	60	68	68	75	75	75	75	75	75	75	75	75
	Intermittent	60	75	85	85	90	95	95	90	90	90	90	90	90
Speed (rpm)	Maximum Continuous	360	360	320	290	275	250	210	190	176	150	130	110	95
	Intermittent	440	447	405	360	340	310	260	230	217	180	180	130	117
Pressure (MPa)	Maximum Continuous	20.5	20.5	20.5	20.5	20.5	20.5	20.5	20.5	19	17.5	17.5	12	10.5
	Intermittent	24	24	24	24	24	24	24	24	23	20.5	20.5	15.5	12
Torque (N.m)	Maximum Continuous	360	470	550	625	710	710	920	990	1010	1085	1085	1000	1050
	Intermittent	420	550	630	710	810	810	1050	1140	1180	1175	1175	1250	1150

- The maximum continuous value refers to the maximum value at which the motor of this displacement can operate continuously.
- The intermittent value refers to the maximum value at which the motor of this displacement can operate for 6 seconds within 1 minute.
- The motor should not be used simultaneously at maximum pressure and maximum speed.
- Recommended oil: Anti-wear hydraulic oil, with a solid contamination level of ISO 18/15 for the working fluid.
- The maximum working oil temperature is 80°C.
- The motor can be used in series or parallel, and when used in series or parallel, the back pressure should not exceed 5 MPa. If exceeded, it is recommended to connect an external drain pipe, which should preferably be directly connected to the oil tank.
- The motor should undergo a break-in period before operating at full load, recommended to run at less than 30% of the maximum working pressure for 1 hour.

Performance Parameters for BME Series

BME-125 Pressure (Mpa)

Flow (L/min)	1.8	3.5	7	10.5	14	17.5	20.5	24
4	27 24	59 23	122 22	184 17	245 12			
8		61 54	125 49	193 45	249 41	294 35	325 32	372 23
15		58 104	126 99	199 90	259 87	304 81	361 76	385 69
25		53 175	122 167	181 156	250 152	301 145	357 140	389 135
34			120 249	184 235	243 220	308 210	349 203	413 196
45			108 327	177 316	238 309	300 294	341 291	408 274
50			100 382	168 378	230 365	293 360	336 335	
60			91 441	156 426	227 411	288 399	332 380	

BME-160 Pressure (Mpa)

Flow (L/min)	1.8	3.5	7	10.5	14	17.5	20.5	24
4	30 21	85 18	165 17	247 15	332 13	389 12	446 8	
8	37 45	82 42	166 40	248 38	328 35	392 32	473 30	553 26
15	39 88	78 86	163 82	246 80	326 78	388 75	462 71	543 66
25		71 147	160 144	239 140	234 135	383 130	458 125	525 118
34		71 204	160 203	239 200	324 194	383 188	458 182	525 175
45		67 268	150 266	229 261	311 255	378 250	447 243	556 233
50			142 314	227 311	308 306	375 300	443 291	500 281
60			128 360	218 357	298 350	368 344	437 338	491 328
68			114 402	206 398	287 394	363 386	416 328	
75			109 449	198 443	284 437	354 428	410 420	

BME-200 Pressure (Mpa)

Flow (L/min)	1.8	3.5	7	10.5	14	17.5	20.5	24
8	44 34	93 31	199 28	301 27	380 26	466 24	547 22	621 18
15	39 72	95 69	203 66	308 62	394 58	478 56	548 53	623 48
25		85 120	195 117	293 113	390 109	472 104	546 100	626 89
34		82 164	189 163	279 161	374 155	462 149	533 141	611 130
45			169 216	268 211	364 205	456 201	528 192	614 183
53			154 251	265 249	362 245	455 240	518 233	602 222
60			136 289	257 282	348 274	447 267	514 263	595 254
68			124 325	238 321	341 316	426 308	503 300	590 291
75			112 362	215 360	322 353	417 346	497 338	
85				190 411	290 406	393 397	478 377	

BME-230 Pressure (Mpa)

Flow (L/min)	1.8	3.5	7	10.5	14	17.5	20.5	24
8	50 31	104 29	212 27	320 25	421 23	518 20	603 16	700 10
15	44 63	106 61	207 58	318 55	426 52	529 47	623 41	712 34
25		101 103	209 100	324 96	428 92	532 87	620 81	705 71
34		88 145	205 143	316 139	421 133	522 126	623 120	702 109
45			186 192	294 187	422 182	507 176	595 170	688 160
53			175 226	290 221	393 215	496 208	584 203	678 194
60			152 256	270 253	390 248	485 242	569 235	661 222
68			140 292	265 288	351 283	482 278	563 273	642 256
75			124 324	235 321	344 316	448 308	552 300	
85				207 366	335 360	442 351	546 338	

BME-260 Pressure (Mpa)

Flow (L/min)	1.8	3.5	7	10.5	14	17.5	20.5	24
8	55 26	117 26	249 24	373 22	491 20	598 18	701 14	
15	51 56	115 55	261 53	374 50	494 47	602 44	705 42	809 36
25	45 93	116 91	246 88	367 84	497 80	605 76	713 71	797 62
34		97 127	230 123	355 119	490 114	601 109	699 104	789 94
45		78 171	219 170	353 167	477 163	583 158	687 152	794 140
53		67 199	204 198	331 196	457 192	575 186	670 180	771 172
60			184 228	302 225	447 221	561 216	654 211	755 198
68			165 257	300 256	423 252	559 245	649 236	744 224
75			140 294	279 283	395 280	530 275	630 268	740 255
85			132 322	266 320	377 316	519 310	616 301	
90			87 341	228 340	365 337	500 330		

BME-300 Pressure (Mpa)

Flow (L/min)	1.8	3.5	7	10.5	14	17.5	20.5	24
8	63 22	148 21	300 20	435 19	569 16	672 13	767 9	826 5
15	66 48	145 47	307 45	430 43	573 39	676 33	816 28	901 20
25	59 81	139 80	291 79	423 75	556 70	681 63	797 56	940 56
34	48 112	131 111	299 109	396 106	566 101	694 95	811 85	933 72
45		97 149	270 148	388 147	531 142	641 134	759 123	887 111
53		77 176	244 175	386 174	528 172	636 164	764 151	907 137
60		65 198	227 197	365 196	560 191	632 185	759 173	899 161
68			202 223	336 222	474 220	635 210	756 199	889 192
75			179 249	325 248	466 245	615 238	747 230	877 213
85			141 283	319 282	459 276	575 268	764 255	
95			107 313	262 311	434 308	556 305	706 290	

BME-350 Pressure (Mpa)

Flow (L/min)	1.8	3.5	7	10.5	14	17.5	20.5	24
8	69 21	149 20	317 20	469 19	602 16	752 16	867 12	
15	74 41	153 40	321 39	479 38	641 36	787 34	900 31	1007 25
25	64 68	151 67	320 66	481 65	642 62	783 59	913 54	1041 45
34	53 95	136 94	311 93	465 91	633 87	777 83	926 76	1058 66
45		102 126	267 125	452 124	596 122	753 115	907 109	1052 99
53		87 148	253 147	428 145	579 142	731 136	900 129	1048 115
60		66 167	238 166	419 165	563 163	728 158	861 151	1019 140
68			223 190	396 190	555 185	712 181	844 171	999 158
75			211 210	381 209	527 207	696 201	841 192	988 179
85			180 237	363 236	522 233	674 228	827 222	
95				361 266	521 263	660 259		

Torque(N.M):1007
Speed(RPM):25

Continuous

Intermittent

Performance Parameters for BME Series

BME-375 Pressure (Mpa)

Flow (L/min)	1.8	3.5	7	10.5	14	17.5	20.5	24
8	82 18	172 17	361 17	534 16	688 14	832 12	960 9	1074 9
15	77 39	164 38	361 37	540 35	692 32	856 29	991 25	1116 25
25	69 64	158 63	354 61	531 58	689 54	868 47	1007 43	1153 34
34	59 89	150 88	343 86	512 82	699 76	852 70	1006 62	1160 52
45		122 118	306 117	484 115	658 111	823 107	988 99	1149 89
53		96 139	285 138	472 136	636 132	795 126	946 118	1117 104
60		76 159	267 159	433 158	600 156	776 153	937 149	1084 139
68			235 180	427 178	592 174	766 167	912 159	1080 146
75			210 198	385 197	563 194	747 187	876 178	1025 163
85			177 225	375 223	533 218	709 213	843 203	
90			150 239	320 237	506 234	662 223		

BME-400 Pressure (Mpa)

Flow (L/min)	1.8	3.5	7	10.5	14	17.5	19	23
8	93 17	190 16	385 15	575 14	750 13	895 10	950 9	1155 7
15	88 36	180 35	380 34	575 33	750 31	905 28	980 24	1165 20
25	88 60	180 59	380 58	575 56	750 53	915 49	1010 44	1165 40
34	75 83	165 83	365 82	560 81	750 77	915 72	1000 68	1180 60
45		150 110	350 110	545 109	735 106	900 102	980 94	1165 86
53		125 130	330 129	525 128	720 125	885 120	960 112	1150 100
60		100 147	305 147	505 146	680 145	860 142	940 138	1125 130
68			275 167	480 167	660 164	745 158	925 150	1100 140
75			250 184	455 183	635 180	820 176	900 170	1065 158
85			225 209	415 208	600 206	785 202	865 194	
90			160 220	365 218	575 216	770 210		

Continuous

Intermittent

BME-475 Pressure (Mpa)

Flow (L/min)	1.8	3.5	7	10.5	14	17.5	20.5
8	101 15	213 14	445 13	675 13	874 12	1040 10	121 8
15	97 30	209 29	456 27	677 27	906 25	1093 22	1282 19
25	97 50	209 49	456 46	668 43	906 41	1093 38	1282 34
34	78 70	186 69	435 66	683 63	880 59	1123 53	1310 43
45		149 93	393 92	649 90	864 87	1099 81	1305 71
53		120 109	358 108	593 107	823 103	1043 98	1255 87
60		85 124	329 124	558 123	818 120	1009 115	1228 106
68		60 141	281 140	538 139	766 136	988 131	1197 121
75			238 156	497 155	727 153	952 148	1155 135
85			207 176	470 174	685 171	907 162	
90			155 187	391 186	637 184	870 176	

BME-540 Pressure (Mpa)

Flow (L/min)	1.8	3.5	7	10.5	14	17.5
8	135 13	240 13	500 12	755 11	974 11	1185 8
15	123 27	232 26	509 26	756 25	989 24	1228 21
25	104 44	227 43	504 42	780 41	994 39	1230 35
34	81 62	214 61	485 60	754 58	984 54	1253 49
45		174 81	440 82	720 80	944 78	1200 74
53		143 96	419 96	683 95	946 93	1179 88
60		107 109	383 109	669 108	903 107	1157 105
68		86 124	360 123	621 123	877 122	1117 119
75			320 137	605 136	833 134	1109 131
85			294 153	542 152	786 151	
90			216 168	490 167	761 167	

BME-620 Pressure (Mpa)

Flow (L/min)	1.8	3.5	7	10.5	12	15.5
8	145 11	286 11	576 10	828 10	958 9	1259 7
15	140 22	281 22	597 21	878 21	985 20	1280 16
25	130 37	276 36	592 36	889 35	1000 34	1306 30
34	115 51	261 51	582 50	893 49	1018 47	1314 44
45		236 69	557 68	873 67	998 66	1284 63
53		200 80	522 80	853 79	978 78	1254 76
60		170 91	491 91	828 90	938 89	1219 88
68		145 104	431 103	777 102	883 101	1189 99
75			421 114	732 113	858 112	1134 110
85			381 130	662 129	798 128	
90			291 138	587 137	732 136	

Torque(N.M):1280
Speed(RPM):16

BME-750 Pressure (Mpa)

Flow (L/min)	1.8	3.5	7	10.5	12
8	163 9	337 9	691 9	1031 8	1165 8
15	156 19	331 19	697 18	1052 18	1190 17
25	143 32	321 31	691 30	1051 30	1185 29
34	110 44	289 44	661 42	1026 41	1175 40
45	71 60	243 59	623 59	987 58	1148 58
53		203 70	571 69	945 68	1110 67
60		140 79	529 78	902 77	1091 76
68		100 90	488 90	856 89	1039 88
75		65 99	427 99	814 98	994 97
85			397 109	748 108	910 107
90			299 119	663 118	804 116

Performance Parameters for BME Series

F1-F2

4-hole
diamond flange

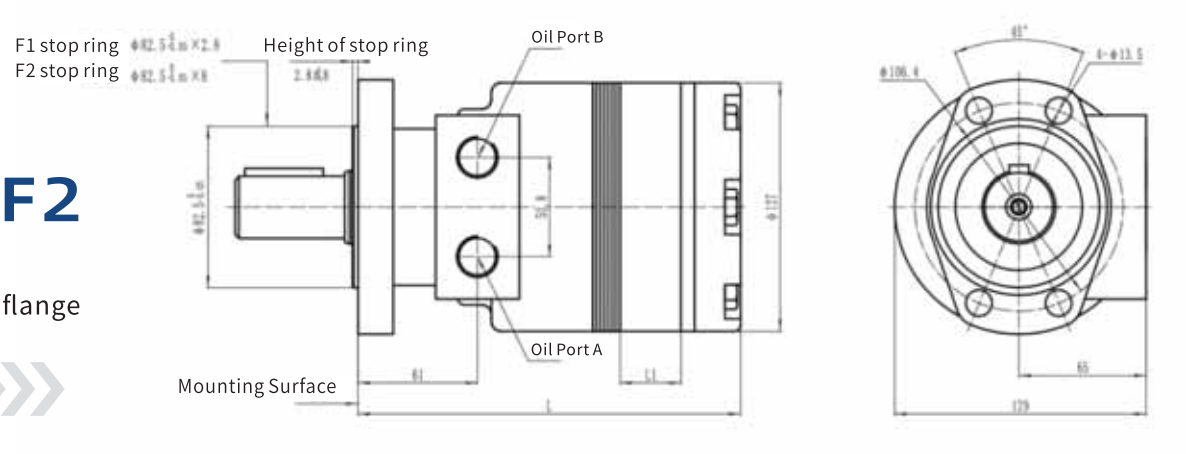

F3-F4

6-hole
diamond flange

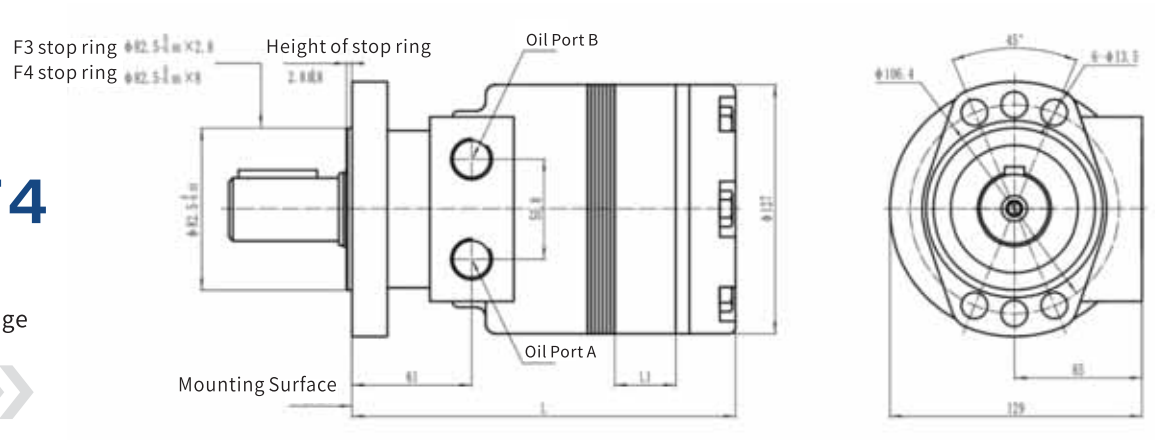

F5

Wheel motor

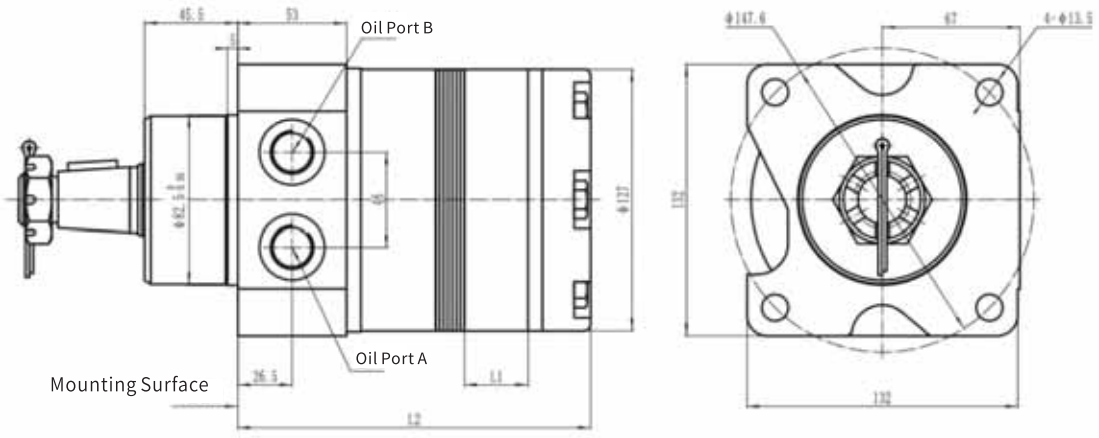

Performance Parameters for BME Series

F6

Wheel motor

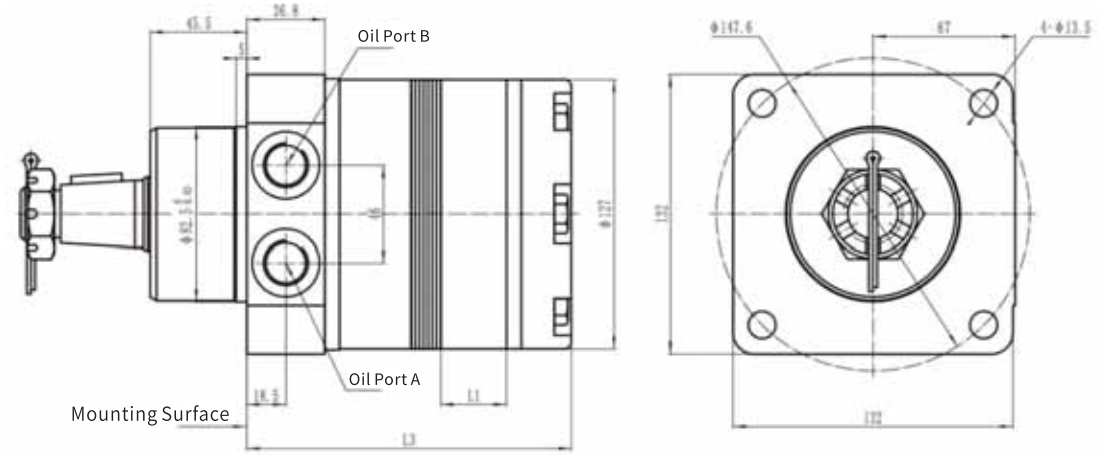

F7

Wheel motor

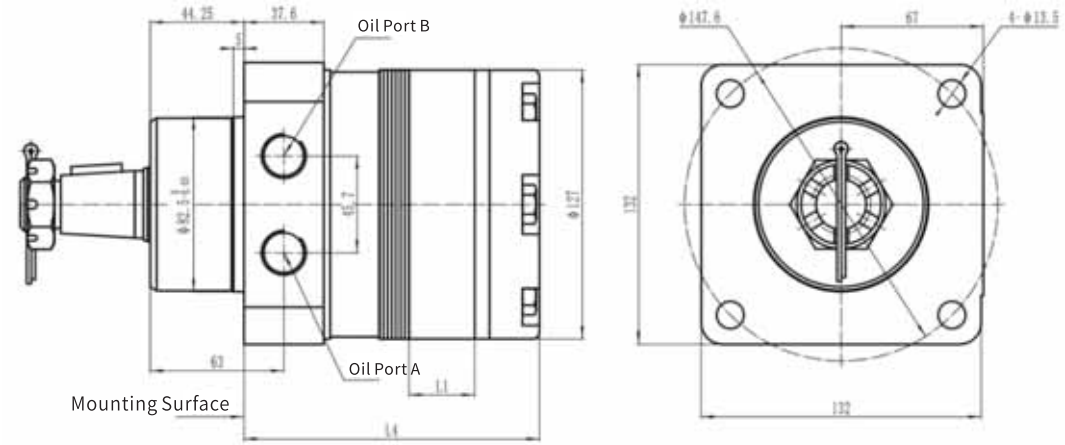

Model	BME-125	BME-160	BME-200	BME-230	BME-260	BME-300	BME-350	BME-375	BME-400	BME-475	BME-540	BME-620	BME-750
L1	11.3	14.5	17.8	20	23	26.2	31	33.5	35.6	42	47.8	54	66
L	176	180	183	185	188	191	196	199	201	207	213	219	231
L2	152	156	159	161	164	167	172	175	177	183	189	195	207
L3	133	137	140	142	145	148	153	156	158	164	170	176	188
L4	120	123	126	129	132	135	140	142	144	151	156	163	175

Common Threads for A/B	
A/B-1	G1/2
A/B-2	7/8-14UNF 0-ring
A/B-3	9/16-18UNF 0-ring

Connection Dimensions for BME Shaft Extension

P1

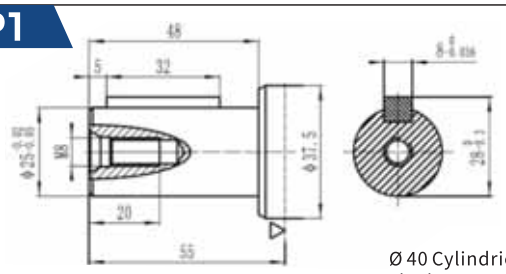

Ø 40 Cylindrical shaft
Flat key 8×7×32

H1

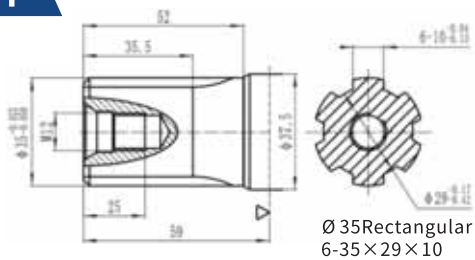

Ø 35Rectangular Spline Shaft
6-35×29×10

P2

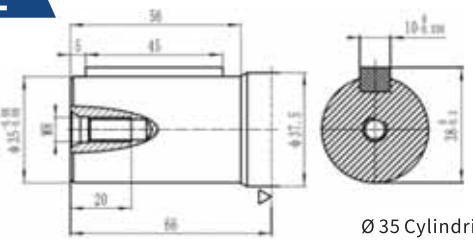

Ø 35 Cylindrical shaft
Flat key 10×8×45

H2

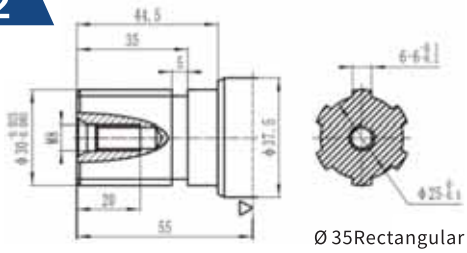

Ø 35Rectangular Spline Shaft
6-30×25×6

P3

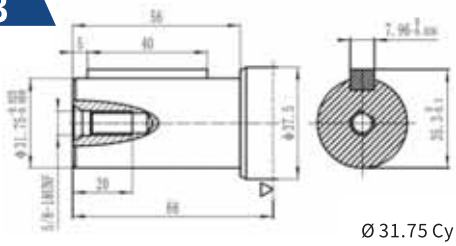

Ø 31.75 Cylindrical shaft
Flat key 7.96×7.96×40

C1

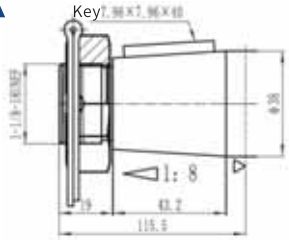

Ø 38Tapered Shaft
Taper 1:8

P4

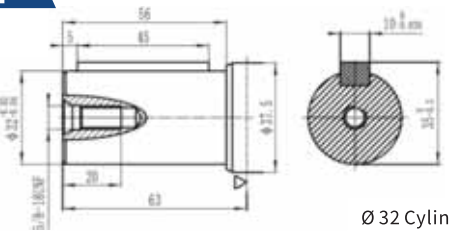

Ø 32 Cylindrical shaft
Flat key 10×8×45

C2

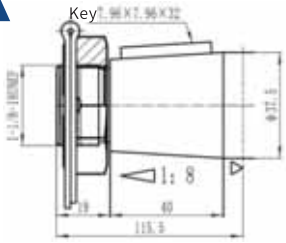

Ø 37.5Tapered Shaft
Taper 1:8

J1

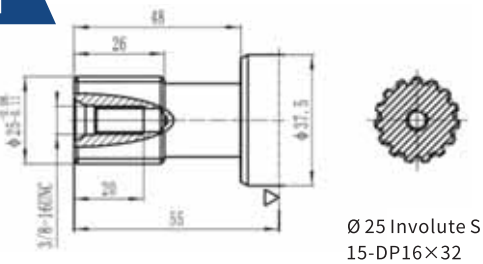

Ø 25 Involute Spline Shaft
15-DP16×32

C3

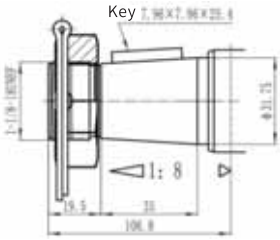

Ø 37.15Tapered Shaft
Taper 1:8

Motor Mounting Surface ▷

Output Shaft Rotation Direction: Standard

When facing the motor shaft extension direction, the shaft rotates:

When oil port A is at high pressure, the output shaft rotates counterclockwise.

When oil port B is at high pressure, the output shaft rotates clockwise.

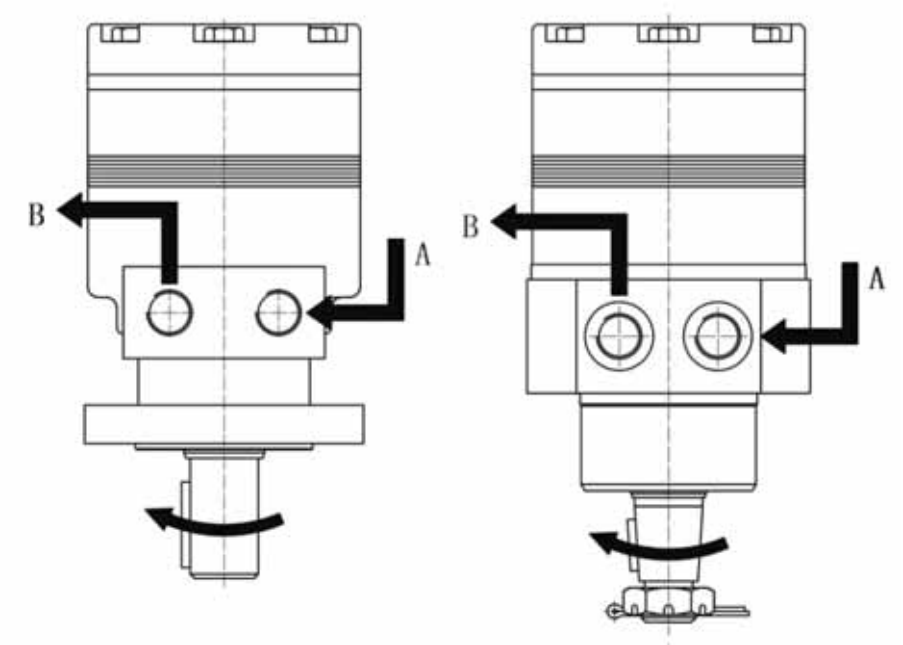

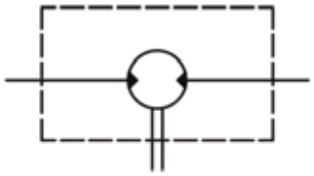

Motor Principle Diagram

BME Motor Radial Force Curve

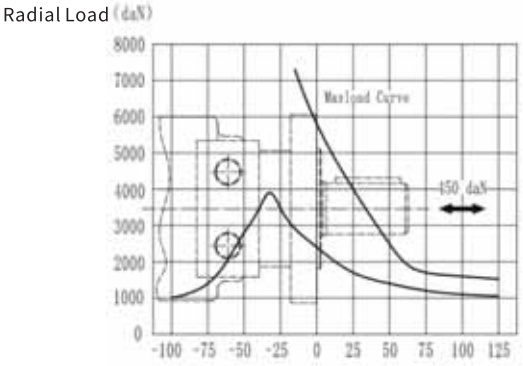

Distance from the force point to the flange surface (mm)

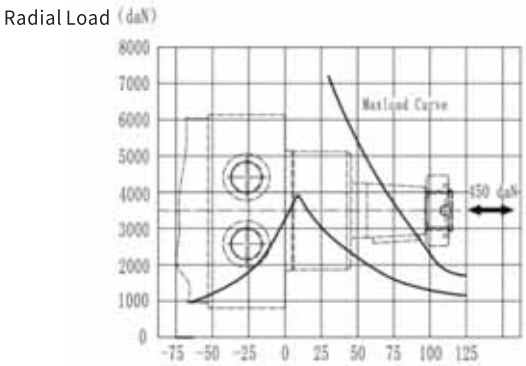

Distance from the force point to the flange surface (mm)

1. This bearing radial load curve guarantees bearing life L10 (12 × 10⊠ revolutions) under allowable load.

2.This maximum bearing load curve indicates the static load capacity of the bearing, which must not be reached during motion..

Ordering Information for Cycloidal Hydraulic Motor of BME Series

Ordering Information:

1		2		3		4		5		6
BME	–		–		–		–		–	

1	Product Series	BME												
2	Displacement (ml/r)	125	160	200	230	260	300	350	375	400	475	540	620	750

3	
Code	Installation Flanges, Stop Rings
F1	4-Ø13.5 4-hole diamond flange, stop ring installation Ø82.5 × 2.8
F2	4-Ø13.5 4-hole diamond flange, stop ring installation Ø82.5 × 8
F3	6-Ø13.5 6-hole diamond flange, stop ring installation Ø82.5 ×2. 8
F4	6-Ø13.5 6-hole diamond flange, stop ring installation Ø82.5 × 8
F5	4-Ø13.5 Wheel motor, stop ring installation Ø82.5 × 5
F6	4-Ø13.5 Wheel motor, stop ring installation Ø82.5 × 5
F7	4-Ø13.5 Wheel motor, stop ring installation Ø82.5 × 5

5	
Code	Oil Port
A/B-1	G1/2
A/B-2	7/8-14UNF 0-ring
A/B-3	9/16-18UNF 0-ring

6	
Code	Rotation
None	Standard
R	Reverse

4	
Code	Output Shaft
P1	Ø25 Flat key shaft, flat key 8×7×32, shaft length 48
P2	Ø35 Flat key shaft, flat key 10×8×45, shaft length 56
P3	Ø31.75 Flat key shaft, flat key 7.96×7.96×40, shaft length 56
P4	Ø32 Flat key shaft, flat key 10×8×45, shaft length 56
H1	Ø35 Rectangular spline shaft, 6-35×29×10, shaft length 52
H2	Ø30 Rectangular spline shaft, 6-30×25×6, shaft length 44.5
J1	Ø25 Involute spline shaft DP16/32, 15 teeth, shaft length 48
C1	Ø38 Tapered shaft, taper 1:8, shaft length 43.2
C2	Ø37.5 Tapered shaft, taper 1:8, shaft length 40
C3	Ø31.75 Tapered shaft, taper 1:8, shaft length 35

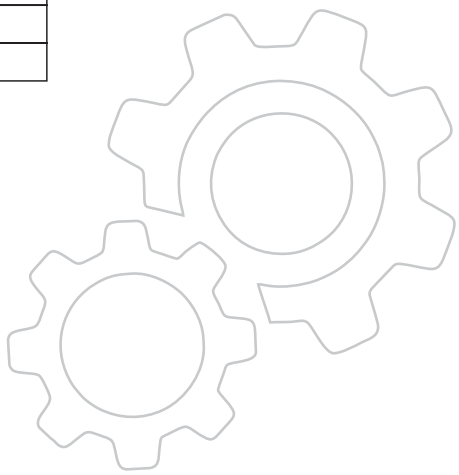

Cycloidal Hydraulic Motors of BMM Series

- Miniature Shaft Distribution Motor
- Compact size, high efficiency, high speed
- Rolling bearing design, capable of withstanding certain lateral forces
- Gerotor-type rotor-stator structure for higher distribution accuracy and mechanical efficiency
- Imported shaft seal design, capable of withstanding high back pressure, suitable for series or parallel use
- Various flange, output shaft, oil port, and other installation configurations available

BMM Technical Parameters

Displacement (ml/r)		8	12.5	20	32	40	50
Flow (L/min)	Maximum Continuous	16	20	120	20	20	20
	Intermittent	20	25	25	25	25	25
Speed (rpm)	Maximum Continuous	1950	1550	1000	630	500	400
	Intermittent	2450	1940	1940	800	630	500
Pressure (MPa)	Maximum Continuous	10	10	10	10	9	7
	Intermittent	14	14	14	14	14	14
Torque (N.m)	Maximum Continuous	11	16	16	40	45	46
	Intermittent	15	23	23	57	70	88

- The maximum continuous value refers to the maximum value at which the motor of this displacement can operate continuously.
- The intermittent value refers to the maximum value at which the motor of this displacement can operate for 6 seconds within 1 minute.
- The motor should not be used simultaneously at maximum pressure and maximum speed.
- Recommended oil: Anti-wear hydraulic oil, with a solid contamination level of ISO 18/15 for the working fluid.
- The maximum working oil temperature is 80°C.
- The motor can be used in series or parallel, and when used in series or parallel, the back pressure should not exceed 5 MPa. If exceeded, it is recommended to connect an external drain pipe, which should preferably be directly connected to the oil tank.
- The motor should undergo a break-in period before operating at full load, recommended to run at less than 30% of the maximum working pressure for 1 hour.

Performance Parameters for BMM Series

BMM-8 Pressure (Mpa)

Flow (L/min)	3.5	5	7	10	12	14
2	3 228	5 218	8 206	10 156	12 111	14 58
4	3 474	5 471	7 461	11 426	13 391	15 331
8	3 953	5 947	7 925	11 884	13 855	15 816
12	2 1445	5 1427	7 1401	10 1363	13 1325	15 1287
15		4 1912	7 1900	10 1861	12 1835	14 1782
20			6 2395	10 2350	11 2328	14 2282

BMM-12.5 Pressure (Mpa)

Flow (L/min)	3.5	5	7	10	12	14
2	6 141	8 136	11 117	16 68	19 35	
4	6 296	8 288	12 274	17 228	19 200	
8	5 604	8 596	12 585	17 542	20 514	24 469
12	5 912	8 905	11 895	16 859	20 834	24 784
15	5 1152	7 1144	11 1136	16 1102	19 1078	23 1038
20	3 1543	7 1532	10 1521	15 1503	19 1484	22 1436
25	2 1912	6 1892	9 1878	14 1849	18 1828	22 1786

Continuous

Intermittent

BMM-20 Pressure (Mpa)

Flow (L/min)	1.7	3.5	5	7	10	12	14
2	3 99	9 96	14 89	19 74	26 42	30 21	
4	4 197	9 191	14 182	19 178	26 134	31 112	36 74
8	4 398	3 395	13 391	19 377	27 340	31 319	36 288
12	3 596	8 594	13 585	18 579	26 545	31 523	37 493
15	3 745	8 741	12 738	17 728	25 695	30 684	36 660
20	1 998	6 985	11 991	19 985	24 962	29 916	35 885
25		4 1247	9 1245	14 1242	23 1189	28 1180	33 1176

BMM-32 Pressure (Mpa)

Flow (L/min)	2	3.5	5	7	10	12	14
2	7 61	15 55	21 52	28 47	40 16		
4	7 126	15 122	21 114	29 106	41 82	48 67	57 49
8	7 250	15 243	21 239	29 231	41 207	49 194	58 169
12	6 378	13 374	20 369	28 362	40 338	48 323	58 296
15	4 476	12 473	18 468	27 462	39 442	47 429	57 406
20	3 633	10 630	17 627	25 619	37 603	46 588	55 567
25	1 792	8 789	15 787	23 783	35 765	43 755	52 733

BMM-40 Pressure (Mpa)

Flow (L/min)	3	5	7	8.5	10	12
2	16 41	27 40	36 33	44 27	51 17	
4	16 96	27 92	37 87	44 78	52 65	62 54
8	15 195	26 196	36 182	44 176	52 166	63 154
12	14 293	25 287	35 283	43 278	51 265	62 257
15	13 371	24 365	34 360	42 358	50 347	62 337
20	10 494	21 492	31 487	39 480	48 472	59 463
25	7 623	19 617	29 612	37 609	44 600	56 592

Torque(N.M):59
Speed(RPM):463

BMM-50 Pressure (Mpa)

Flow (L/min)	1.5	3	5	7	10
2	11 35	23 33	36 26	50 22	
4	11 74	22 75	36 68	50 65	70 52
8	11 157	21 154	35 149	50 145	71 136
12	11 236	20 235	33 231	49 224	71 218
15	10 296	18 295	32 294	47 288	69 283
20	8 395	14 395	29 394	44 393	64 382
25	4 497	10 496	25 496	40 490	59 483

Installation Dimensions for BMM Series

F1

2-hole
diamond flange

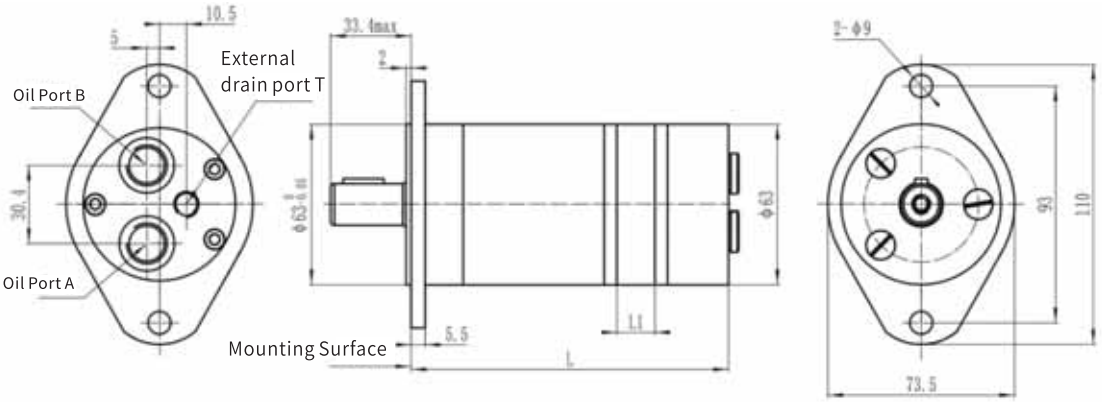

F2

2-hole
diamond flange

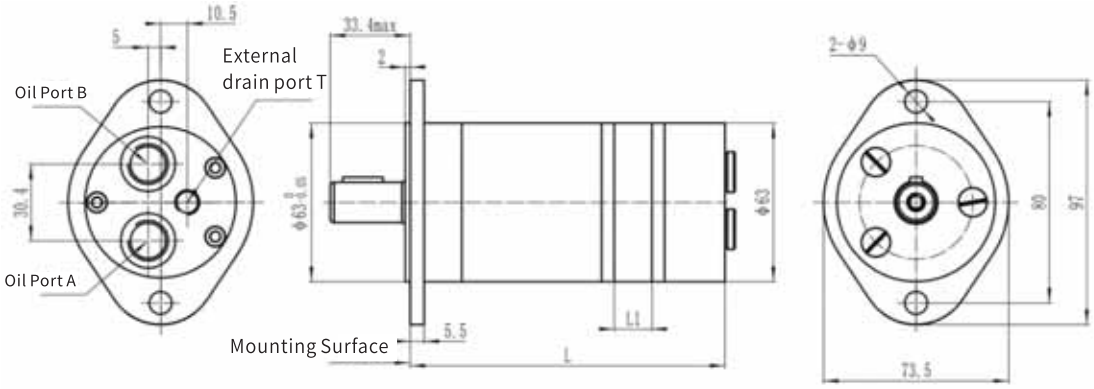

F3-4

Threaded hole
round flange

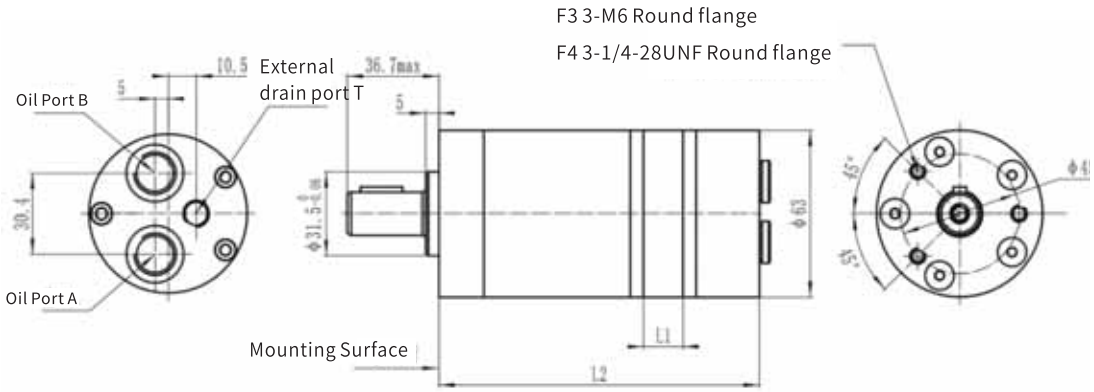

Installation Dimensions for BMM Series

F5

2-hole
diamond flange

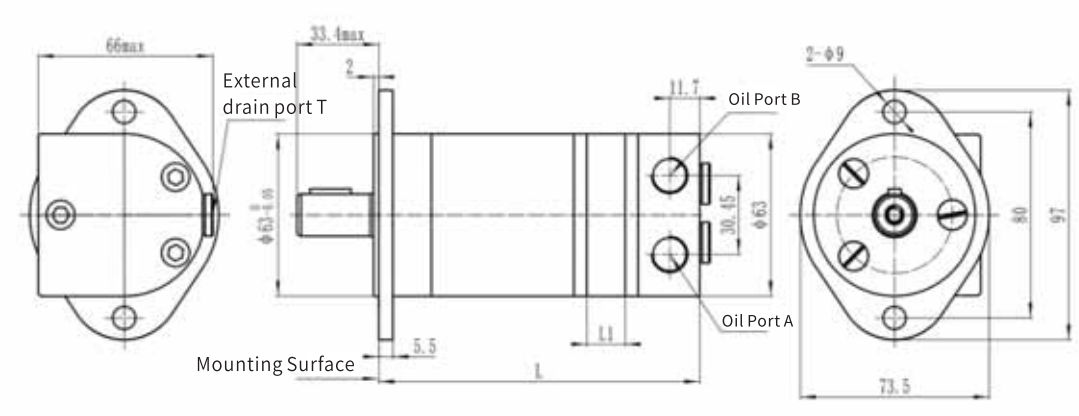

F6-7

Threaded hole
round flange

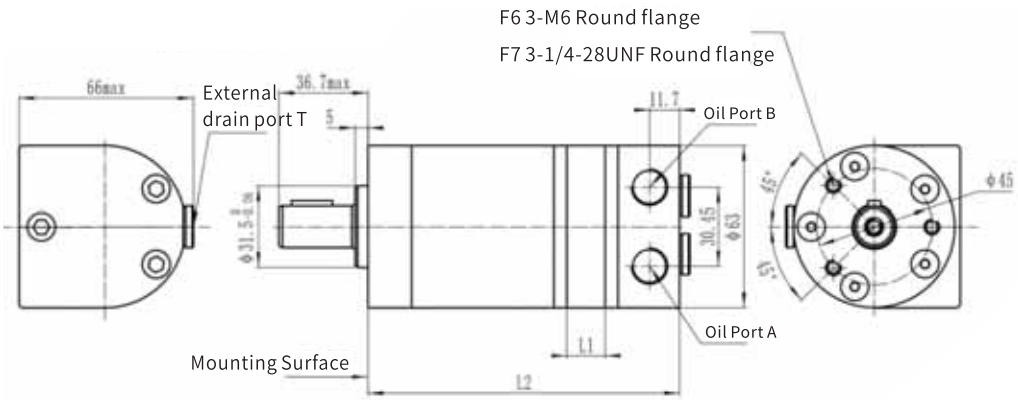

Model	BMK-8	BMK-12.5	BMK-20	BMK-32	BMK-40	BMK-50
L1	4	6.2	9.8	15.7	19.6	24.5
L	112.5	114.7	117.5	124.2	121	133
L2	109	111.2	114	120.7	124.6	129.5

Common Threads for A/B		Common Threads for External Drain Port T	
A/B-1	G3/8	T1	G1/8
A/B-2	9/6-18UNF	T2	3/8-24UNF

Connection Dimensions for BME Shaft Extension

P1

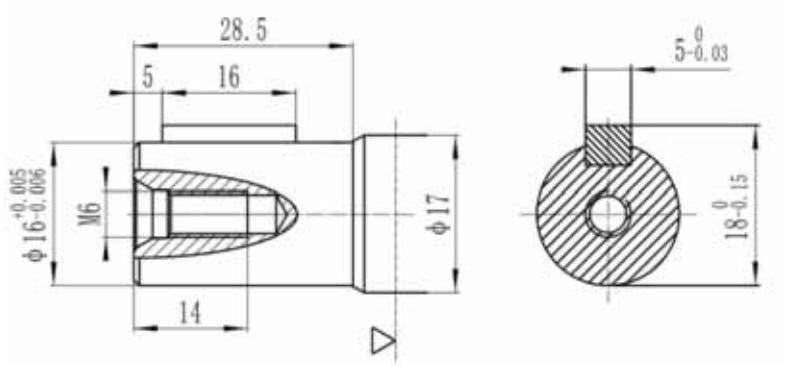

Ø 16 Cylindrical Shaft
Flat Key5×5×16

P2

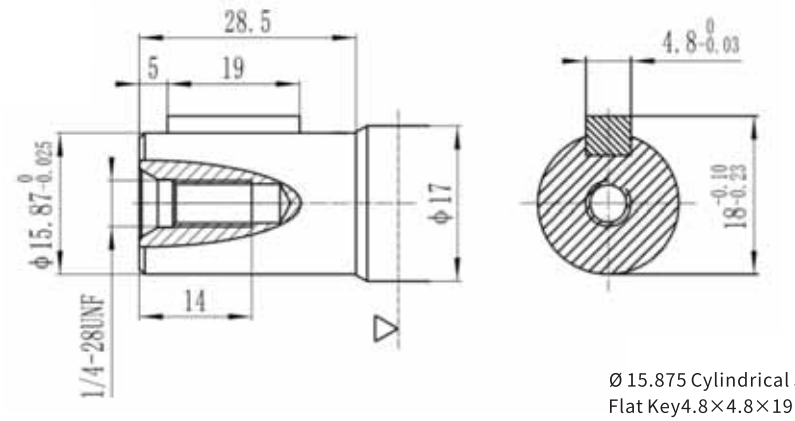

Ø 15.875 Cylindrical Shaft
Flat Key4.8×4.8×19

P3

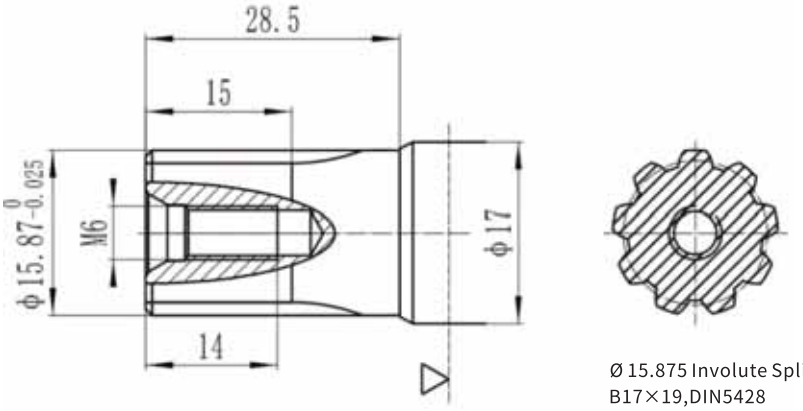

Ø 15.875 Involute Spline Shaft
B17×19,DIN5428

Motor Mounting Surface ▷

Output Shaft Rotation Direction: Standard

When facing the motor shaft extension direction, the shaft rotates:

When oil port A is at high pressure, the output shaft rotates clockwise.

When oil port B is at high pressure, the output shaft rotates counterclockwise.

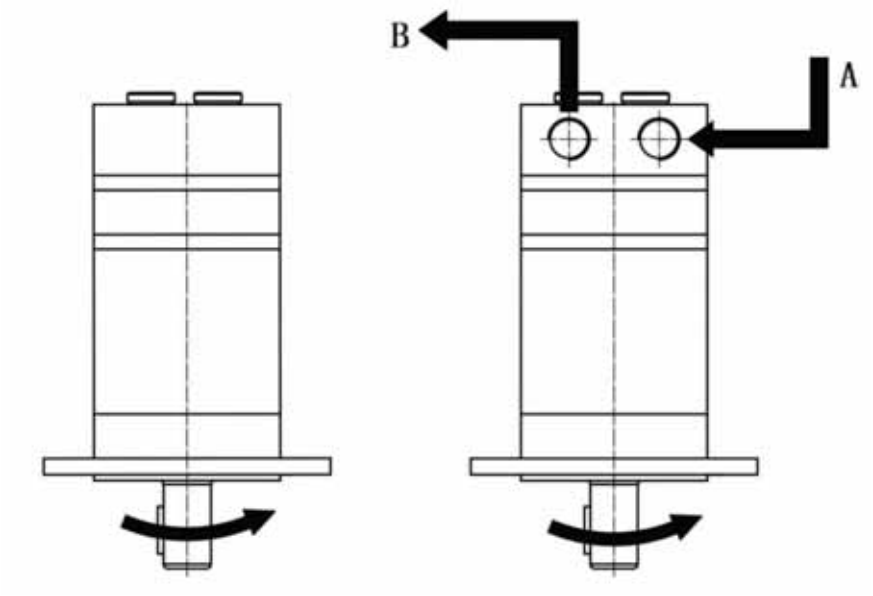

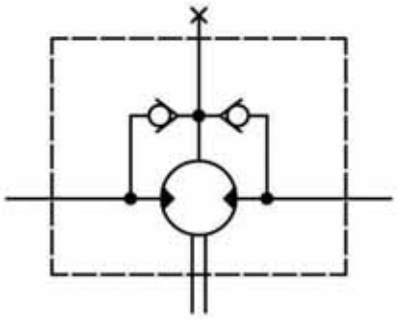

Motor Principle Diagram

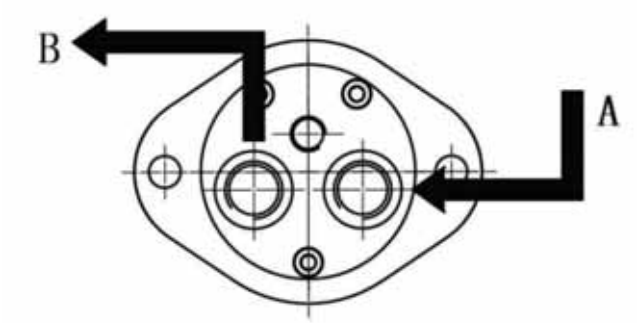

BMM Motor Radial Force Curve

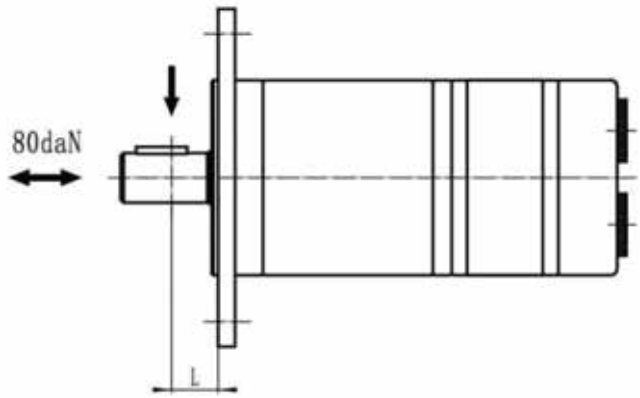

$$F_r = \frac{600}{n} * \frac{13040}{61.5+L} \text{ (daN)}$$

Fr = Radial Force (daN)
L = Distance (mm)
n = Speed (rpm)
Diamond Flange L=15mm
No Flange L=20mm

Ordering Information for Cycloidal Hydraulic Motor of BMM Series

Ordering Information:

1		2		3		4		5		6		7
BMM	–		–		–		–		–		–	

1	Product Series	BMM					
2	Displacement (ml/r)	8	12.5	20	32	40	50

3	
Code	Installation Flanges, Stop Rings
F1	2-Ø9 2-hole diamond flange, stop ring installation Ø63×2, rear oil port
F2	2-Ø9 2-hole diamond flange, stop ring installation Ø63×2, rear oil port
F3	3-M Round flange, stop ring installation Ø31.5×5, rear oil port
F4	3-1/4-28UN Round flange, stop ring installation Ø31.5×5, rear oil port
F5	2-Ø9 2-hole diamond flange, stop ring installation Ø63×2
F6	3-M6 Round flange, stop ring installation Ø31.5×5
F7	3-1/4-28UNF Round flange, stop ring installation Ø31.5×5

4	
Code	Output Shaft
P1	Ø16 Flat key shaft, flat key 5×5×16, shaft length 28.5
P2	Ø15.875 Flat key shaft, flat key 4.8×4.8×19, shaft length 28.5
J1	Ø15.875 Involute spline shaft, B17×14, DIN5482, shaft length 28.5

5	
Code	Oil Port
A/B-1	G3/8
A/B-2	9/16-18UNF

6	
Code	External Drain Port
T1	G1/8
T2	3/8-24UNF

7	
Code	Rotation
None	Standard
R	Reverse

Cycloidal Hydraulic Motors of J6K Series

- Based on BMT series motor, with additional brake
- Brake consists of friction plates (dynamic & static) and a disc spring; braking is released by external control oil pressure
- Compact structure, easy installation, high braking reliability
- Higher working pressure, large output torque
- Integrated shuttle valve, balance valve, and other functional valves
- Integrated with functions such as overflow valves, balancing valves, etc.

J6K Technical Parameters

Displacement (ml/r)		195	245	310	390	490	625	800	985
Flow (L/min)	Maximum Continuous	150	150	150	150	150	150	150	150
	Intermittent	170	210	225	225	225	225	225	225
Speed (rpm)	Maximum Continuous	775	615	485	387	307	241	184	153
	Intermittent	866	834	698	570	454	355	278	230
Pressure (MPa)	Maximum Continuous	17	17	17	17	17	12	12	12
	Intermittent	27.5	27.5	27.5	27.5	24	14	14	14
Torque (N.m)	Maximum Continuous	475	615	775	965	1215	1125	1380	1570
	Intermittent	770	980	1225	1455	1685	1330	1650	1875
Braking torque (N · m)		Parking braking torque: 800 N · m, dynamic braking not allowed.							
Brake release pressure (MPa)		⩾3MPa							
Maximum flow rate of balance valve (L/min)		120L/min							
Notes		Must be used with an external drain port. Continuous operation under maximum pressure and maximum speed conditions is not recommended. During braking, the external control oil port must not have pressure, otherwise the braking torque will be reduced. The back pressure of the hydraulic system should preferably be 0 Mpa.							

- The maximum continuous value refers to the maximum value at which the motor of this displacement can operate continuously.
- The intermittent value refers to the maximum value at which the motor of this displacement can operate for 6 seconds within 1 minute.
- The motor should not be used simultaneously at maximum pressure and maximum speed.
- Recommended oil: Anti-wear hydraulic oil, with a solid contamination level of ISO 18/15 for the working fluid.
- The maximum working oil temperature is 80°C.
- The motor can be used in series or parallel, and when used in series or parallel, the back pressure should not exceed 5 MPa. If exceeded, it is recommended to connect an external drain pipe, which should preferably be directly connected to the oil tank.
- The motor should undergo a break-in period before operating at full load, recommended to run at less than 30% of the maximum working pressure for 1 hour.

Installation Dimensions for J6K Series

F1

4-hole square flange with integrated unidirectional balance valve

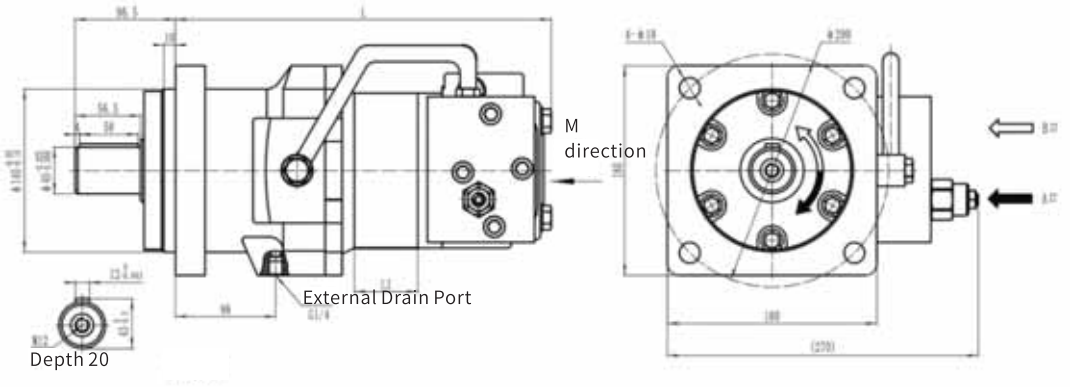

M-direction rotation

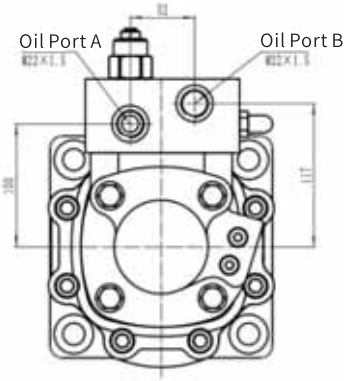

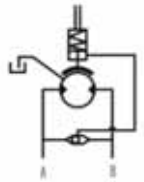

Motor Principle Diagram

Technical Requirements:
1. Static braking torque: 800 N·m, dynamic braking not allowed
2. Brake release pressure ≥ 3 MPa
3. Must be used with an oil return port
4. Continuous operation under maximum pressure and maximum flow conditions is not recommended
5. Maximum balance valve flow: 120 L/min
6. When facing the motor shaft extension, if port A is the high-pressure oil port, the output shaft rotates clockwise

F2

4-hole square flange with integrated shuttle valve

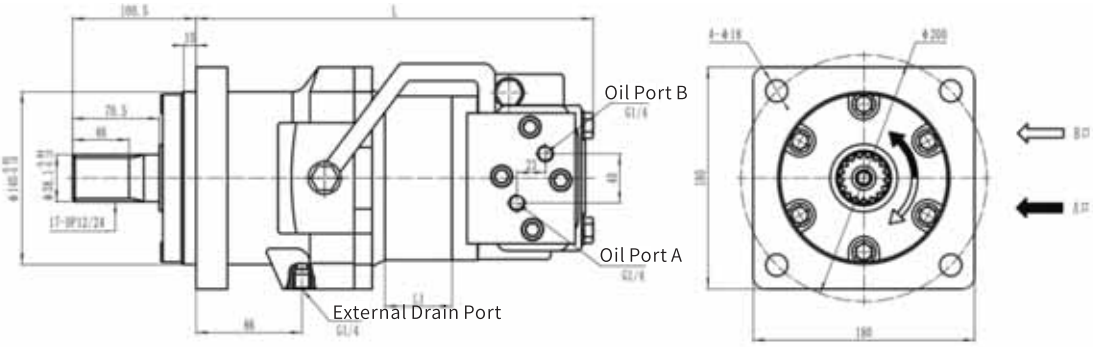

Technical Requirements:
1. Static braking torque: 800 N·m, dynamic braking not allowed
2. Brake release pressure ≥ 3 MPa
3. Must be used with an oil return port; continuous operation under maximum pressure and maximum flow conditions is not recommended
4. When facing the motor shaft extension, if port A is the high-pressure oil port, the output shaft rotates counterclockwise

Model	J6K-195	J6K-245	J6K-310	J6K-390	J6K-490	J6K-625	J6K-800	J6K-985
L1	21.7	27.3	34.5	45	54.4	69	90	108.8
L	290.5	296	303	314	323	338	359	377.5

Cycloidal Hydraulic Motors of ZBMR Series

- Based on the BMR series motor, with additional brake
- ZBMR-W series: composed of a BMR motor, dynamic and static friction plates, and a disc spring. Braking is released by external shuttle valve control oil pressure. When the motor stops, synchronized braking is achieved, effectively ensuring braking at stop, safe and reliable.
- ZBMR-N series: composed of a BMR motor and a mechanical brake. Braking is released by control oil pressure via a built-in shuttle valve. Its braking features point braking, i.e., in one motor revolution there are 6 braking points. When stopping, the motor may need to rotate up to 60° before braking is applied. It cannot stop movement at any arbitrary point and is not suitable for precise positioning.
- Compact structure, easy to install.

ZBMR Technical Parameters

Displacement (ml/r)		100	125	160	200	250	315	400
Flow (L/min)	Maximum Continuous	58	58	58	58	58	58	58
	Intermittent	68	68	68	68	68	68	68
Speed (rpm)	Maximum Continuous	551	440	344	276	220	175	140
	Intermittent	646	516	404	323	258	205	162
Pressure (MPa)	Maximum Continuous	14	14	14	12.5	11	9	9
	Intermittent	17	17	17	15	13	11	10
Torque (N.m)	Maximum Continuous	178	223	285	318	350	360	418
	Intermittent	216	270	346	382	416	400	464
Braking torque (N·m)		150N.m						
		350-400N.m						
Brake release pressure (Mpa)		⩾2MPa						
		⩾2MPa						
Notes		Continuous operation under maximum pressure and maximum speed conditions is not recommended. During braking, the external control oil port must not have pressure, otherwise the braking torque will be reduced. The back pressure of the hydraulic system should preferably be 0 Mpa.						

Cycloidal Hydraulic Motors of ZBMR Series

- The maximum continuous value refers to the maximum value at which the motor of this displacement can operate continuously.
- The intermittent value refers to the maximum value at which the motor of this displacement can operate for 6 seconds within 1 minute.
- The motor should not be used simultaneously at maximum pressure and maximum
- speed.
- Recommended oil: Anti-wear hydraulic oil, with a solid contamination level of ISO 18/15 for the working fluid.
- The maximum working oil temperature is 80°C.
- The motor can be used in series or parallel, and when used in series or parallel, the back pressure should not exceed 5 MPa. If exceeded, it is recommended to connect an external drain pipe, which should preferably be directly connected to the oil tank.
- The motor should undergo a break-in period before operating at full load, recommended to run at less than 30% of the maximum working pressure for 1 hour.

Installation Dimensions for ZBMR Series

ZMBR -N-1

2-hole diamond flange, straight shaft Ø25

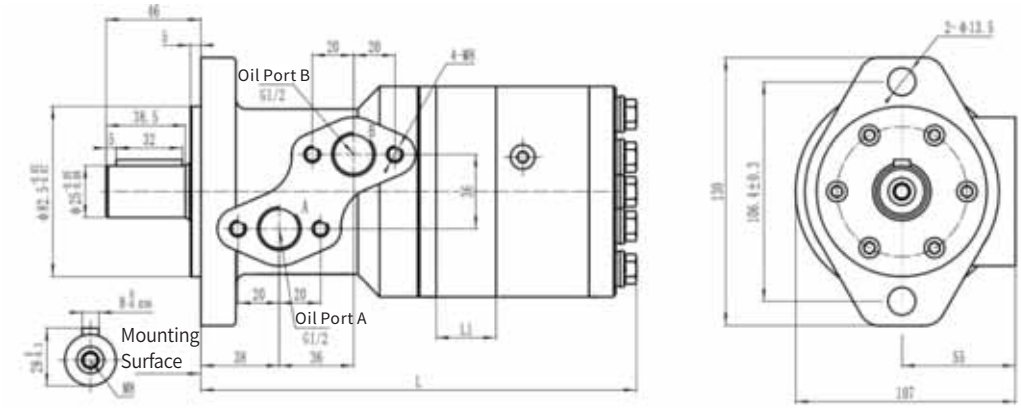

ZMBR -N-2

2-hole diamond flange, straight shaft Ø25.4

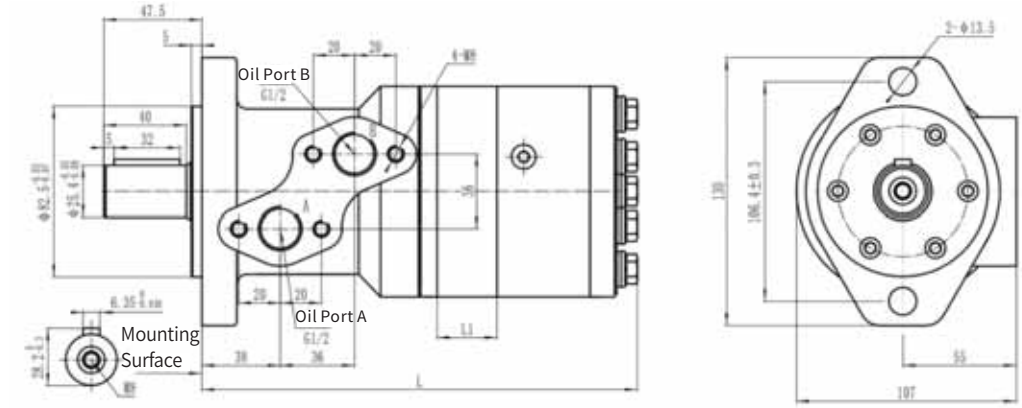

ZMBR -N-3

4-hole diamond flange, straight shaft Ø25.4

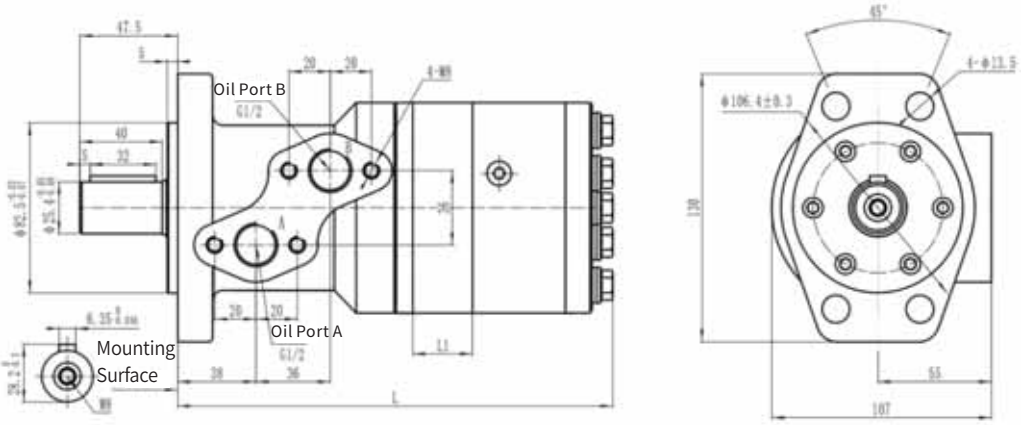

Installation Dimensions for ZBMR Series

ZMBR -W-1

2-hole diamond flange, straight shaft Ø25

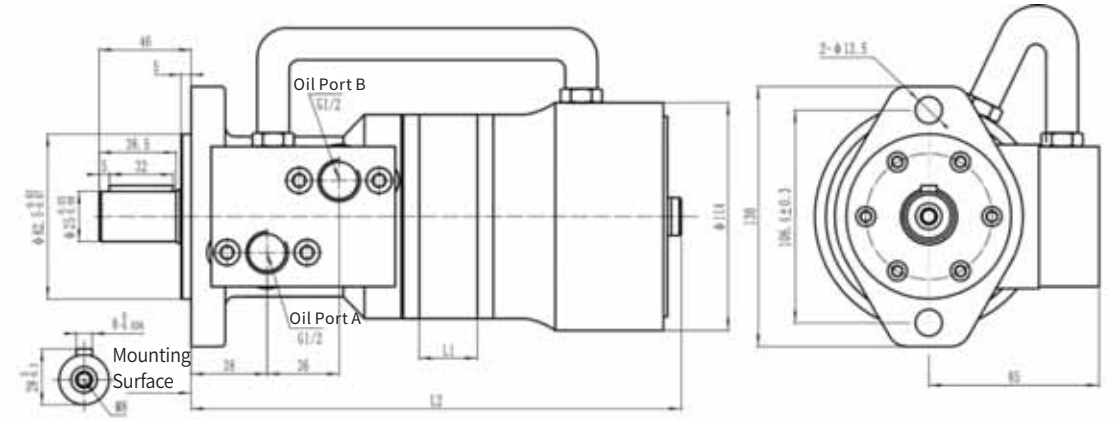

Model	ZBMR-100	ZBMR-125	ZBMR-160	ZBMR-200	ZBMR-250	ZBMR-315	ZBMR-400
L1	17.8	23	29	37	46	57	72
L	200	205	211	219	228	239	254
L2	234	239	245	253	262	273	288

Output Shaft Rotation Direction: Standard

When facing the motor shaft extension direction, the shaft rotates:

When oil port A is at high pressure, the output shaft rotates clockwise.

When oil port B is at high pressure, the output shaft rotates counterclockwise.

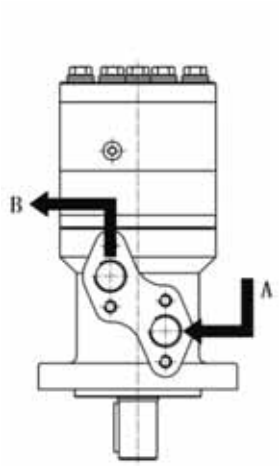

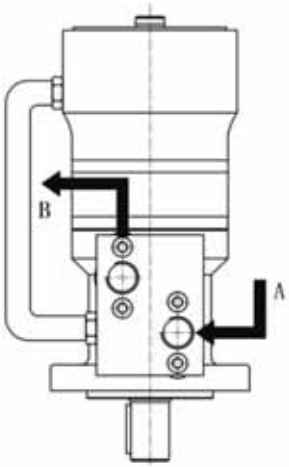

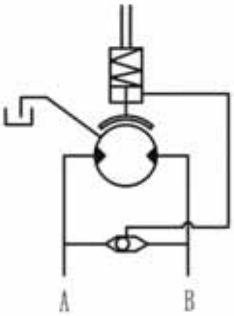

Motor Principle Diagram

Gaudent Technology

Zoucheng Sanyang
Machinery Company Limited

SYM Price List

Call ALA Industries For Your Discount

SYM Model	GRH Model	ALA List Price for SYM	Your Discounted Net Cost
BMV-315	GV-315	$1,477	
BMV-400	GV-400	$1,554	
BMV-500	GV-500	$1,608	
BMV-630	GV-630	$1,662	
BMV-800	GV-800	$1,731	
BMV-1000	GV-1000	$1,731	
BMH-125	GH-125	$662	
BMH-160	GH-160	$662	
BMH-200	GH-200	$662	
BMH-250	GH-250	$716	
BMH-315	GH-315	$747	
BMH-400	GH-400	$785	
BMH-500	GH-500	$824	
BMT-200	GT-200	$1,100	
BMT-250	GT-250	$1,154	
BMT-315	GT-315	$1,231	
BMT-400	GT-400	$1,308	
BMT-500	GT-500	$1,424	
BMT-630	GT-630	$1,539	
BMT-800	GT-800	$1,654	
BME120	GWD120	$1,039	
BME160	GWD160	$1,039	
BME200	GWD200	$1,039	
BME230	GWD230	$1,039	
BME250	GWD250	$1,039	
BME300	GWD300	$1,039	
BME350	GWD350	$1,039	
BME375	GWD375	$1,154	
BME475	GWD475	$1,154	
BME540	GWD540	$1,154	
BME620	GWD620	$1,270	
BME750	GWD750	$1,270	
BMPH-36	GPH-36	$400	
BMPH-50	GPH-50	$400	
BMPH-80	GPH-80	$400	
BMPH-100	GPH-100	$416	
BMPH-125	GPH-125	$424	
BMPH-160	GPH-160	$431	
BMPH-200	GPH-200	$462	
BMPH-250	GPH-250	$462	
BMPH-315	GPH-315	$485	
BMPH-400	GPH-400	$485	
BMT(BMK6)-200	GKC-200	$1,100	
BMT(BMK6)-250	GKC-250	$1,100	

SYM Price List

Call ALA Industries For Your Discount

SYM Model	GRH Model	ALA List Price for SYM	Your Discounted Net Cost
BMT(BMK6)-315	GKC-315	$1,185	
BMT(BMK6)-400	GKC-400	$1,308	
BMT(BMK6)-500	GKC-500	$1,385	
BMT(BMK6)-630	GKC-630	$1,462	
BMT(BMK6)-800	GKC-800	$1,539	
BMT(BMK6)-1000	GKC-1000	$1,616	
BMS-80	GKA-80	$808	
BMS-100	GKA-100	$808	
BMS-125	GKA-125	$831	
BMS-160	GKA-160	$831	
BMS-200	GKA-200	$831	
BMS-250	GKA-250	$831	
BMS-315	GKA-315	$870	
BMS-400	GKA-400	$916	
BMS-500	GKA-500	$916	
BMRS-50	GRS-50	$393	
BMRS-80	GRS-80	$393	
BMRS-100	GRS-100	$424	
BMRS-125	GRS-125	$400	
BMRS-160	GRS-160	$462	
BMRS-200	GRS-200	$477	
BMRS-250	GRS-250	$485	
BMRS-315	GRS-315	$500	
BMRS-400	GRS-400	$500	
BMSY(BMK2)-80	GS-80	$700	
BMSY(BMK2)-100	GS-100	$700	
BMSY(BMK2)-125	GS-125	$747	
BMSY(BMK2)-160	GS-160	$770	
BMSY(BMK2)-200	GS-200	$770	
BMSY(BMK2)-250	GS-250	$793	
BMSY(BMK2)-315	GS-315	$824	
BMSY(BMK2)-400	GS-400	$900	
BMSY(BMK2)-475	GS-475	$900	
BMP/BMPT-36	GP-36	$377	
BMP/BMPT-50	GP-50	$377	
BMP/BMPT-80	GP-80	$377	
BMP/BMPT-100	GP-100	$377	
BMP/BMPT-125	GP-125	$416	
BMP/BMPT-160	GP-160	$424	
BMP/BMPT-200	GP-200	$431	
BMP/BMPT-250	GP-250	$462	
BMP/BMPT-315	GP-315	$462	
BMP/BMPT-400	GP-400	$485	
BMP/BMPT-500	GP-500	$485	

SYM Price List

Call ALA Industries For Your Discount

SYM Model	GRH Model	ALA List Price for SYM	Your Discounted Net Cost
BMP/BMPT-630	GP-630	$485	
BMR-50	GR-50	$377	
BMR-80	GR-80	$377	
BMR-100	GR-100	$377	
BMR-125	GR-125	$400	
BMR-160	GR-160	$424	
BMR-200	GR-200	$447	
BMR-250	GR-250	$462	
BMR-315	GR-315	$485	
BMR-400	GR-400	$516	
BMM-8	GM-8	$462	
BMM-12.5	GM-12.5	$462	
BMM-20	GM-20	$462	
BMM-32	GM-32	$462	
BMM-40	GM-40	$462	
BMM-50	GM-50	$462	